No. PF-36PA

TCM®

PARTS MANUAL

FORKLIFT TRUCK

GAS & DIESEL POWERED

FG30C6 FD30C6
FG30T6 FD30T6

TCM CORPORATION

ご使用のまえに

このパーツマニアルは，TCM フォークリフトの構成部品を収録しています。

部品ご注文について

部品ご注文の際は，必ず車両の形式・仕様・製造番号（号車），部品番号および注文数を明示してください。車両の製造番号（号車）は車両銘板に表示しています。

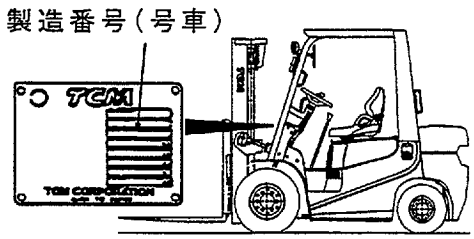

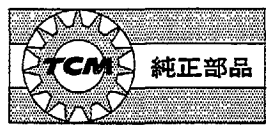

部品は，必ず「TCM 純正部品」をご使用ください。
純正部品以外の部品をご使用になり，故障が発生した場合は保証できません。

ご使用について

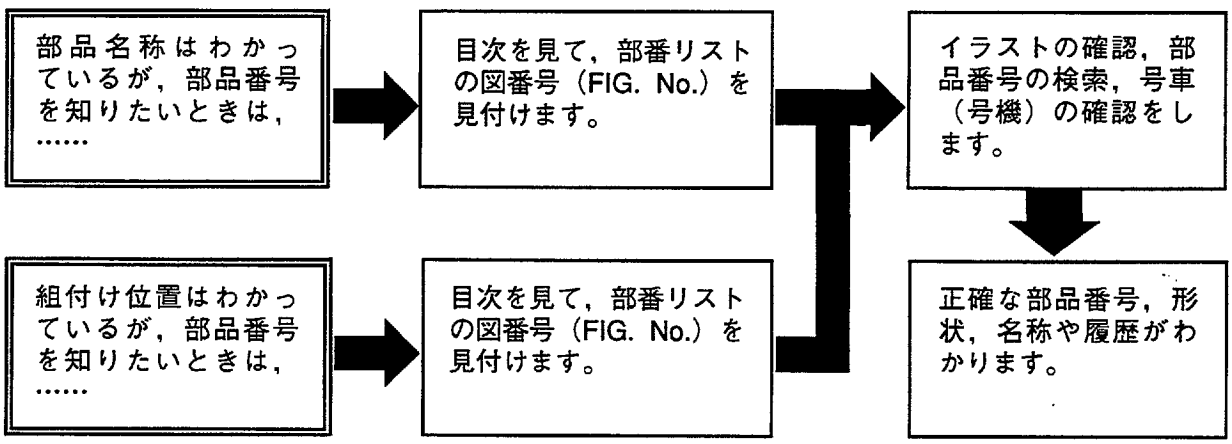

略語および記号

ＡＳＳＹ	組立品を示します。
ＲＨ	車両の前方向に向かって右側を示します。
ＬＨ	車両の前方向に向かって左側を示します。
ＡＲ	必要に応じた数を使用します。
＊	セットおよびキットの販売部品を示します。
Ｔ	厚みを示します。
＋	図示していません。
＃	単体販売しません。

部品は，品質向上のため予告なく変更することがありますので，あらかじめご了承ください。
詳細は，TCM 指定整備工場にご相談ください。

INTRODUCTION

This Parts Manual contains the component parts of the **TCM FORKLIFT TRUCK**.

How to order parts

When ordering, be sure to specify the model name, specification and serial number (machine number) of your machine, as well as the part number and desired quantity for each part. The machine serial number (machine number) is indicated on the machine name plate.

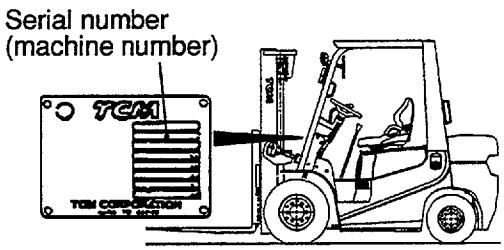

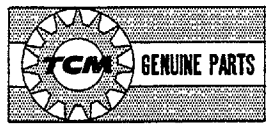

Always use "TCM's Genuine Parts". We cannot guarantee any loss or trouble attributable to other parts than ours.

How to use the Parts Manual

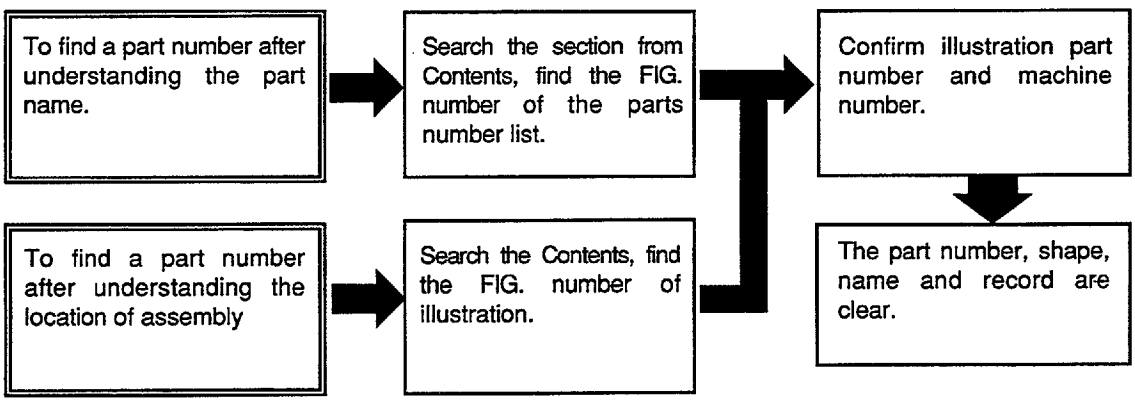

Abbreviations and symbols

ASSY ···	Assembled unit.
RH ·····	Right-hand when viewed forward on the truck.
LH ·····	Left-hand when viewed forward on the truck.
AR ·····	Quantity required.
* ·····	The marketable part set or kit.
T ·····	Thickness.
+ ·····	Not illustrated.
# ·····	Not sold separately.

Materals and specifications subject to change without notice.

CONTENTS
CHASSIS

A	FG30C6	C	FD30C6
B	FG30T6	D	FD30T6

SECTION	A	B	C	D	FIG. NO.
ENGINE MOUNT	O	O	O	O	1
AIR CLEANER(G-TYPE)	O	O			2
AIR CLEANER(D-TYPE)			O	O	3
AIR DUCT(G-TYPE)	O	O			4
AIR DUCT(D-TYPE)			O	O	5
COOLING UNIT(G-TYPE)	O	O			6
COOLING UNIT(D-TYPE)			O	O	7
FUEL SYSTEM(G-TYPE)	O	O			8
FUEL SYSTEM(D-TYPE)			O	O	9
EXHAUST SYSTEM(G-TYPE)	O	O			10
EXHAUST SYSTEM(D-TYPE)			O	O	11
COMBINATION METER	O	O	O	O	12
STEERING SHAFT COVER	O	O	O	O	13
ELECTRIC PARTS(G-TYPE)	O	O			14
ELECTRIC PARTS(D-TYPE)			O	O	15
LIGHT UNIT	O	O	O	O	16
BACK BUZZER	O	O	O	O	17
DRIVE UNIT MOUNT(C-TYPE)	O		O		18
CLUTCH(C-TYPE)	O		O		19
MISSION CASE(C-TYPE)	O		O		20
MISSION GEAR(C-TYPE)	O		O		21
DRIVE UNIT MOUNT(T-TYPE)		O		O	22
TORQUE CONVERTER CASE (T-TYPE)		O		O	23
CHARGING PUMP (T-TYPE)		O		O	24
MISSION CASE (T-TYPE)		O		O	25
CLUTCH PACK (T-TYPE)		O		O	26
CONTROL VALVE (T-TYPE)		O		O	27
REDUCTION(C-TYPE)(T-TYPE)	O	O	O	O	28
DIFFERENTIAL(C-TYPE)(T-TYPE)	O	O	O	O	29
DRIVE AXLE	O	O	O	O	30
WHEEL BRAKE	O	O	O	O	31
STEERING WHEEL UNIT	O	O	O	O	32
GEAR BOX	O	O	O	O	33
ORBITROL [OBT]<EXC>	O	O	O	O	34
FITTING (GEAR BOX & ORBITROL)	O	O	O	O	35
DRAG LINK	O	O	O	O	36
STEERING AXLE	O	O	O	O	37
STEERING AXLE [OBT],<EXC>	O	O	O	O	38
AXLE SUPPORT	O	O	O	O	39
HUB NUT	O	O	O	O	40
FRONT WHEEL	O	O	O	O	41
REAR WHEEL	O	O	O	O	42
POWER CYLINDER	O	O	O	O	43

CONTENTS
CHASSIS

A	FG30C6	C	FD30C6
B	FG30T6	D	FD30T6

SECTION	A	B	C	D	FIG. NO.
POWER CYLINDER [OBT],<EXC>	O	O	O	O	44
POWER CYLINDER FITTING [OBT],<EXC>	O	O	O	O	45
OVER HEAD GUARD	O	O	O	O	46
FRONT PIPE	O	O	O	O	47
REAR PIPE	O	O	O	O	48
HEAD GUARD PARTS	O	O	O	O	49
ACCEL PEDAL	O	O	O	O	50
FOOT PEDAL(C-TYPE)	O		O		51
FOOT PEDAL CYLINDER(C-TYPE)	O		O		52
BRAKE PIPE(C-TYPE)	O		O		53
FOOT PEDAL COVER	O	O	O	O	54
FOOT PEDAL(T-TYPE)		O		O	55
FOOT PEDAL CYLINDER(T-TYPE)		O		O	56
FOOT PEDAL LINK(T-TYPE)		O		O	57
BRAKE PIPE(T-TYPE)		O		O	58
BRAKE LEVER	O	O	O	O	59
FRAME	O	O	O	O	60
OIL TANK	O	O	O	O	61
FUEL TANK	O	O	O	O	62
BALANCE WEIGHT	O	O	O	O	63
FRONT GUARD	O	O	O	O	64
BONNET	O	O	O	O	65
RADIATOR COVER	O	O	O	O	66
FLOOR BOARD	O	O	O	O	67
SEAT	O	O	O	O	68
MAIN PUMP (G-TYPE)	O	O			69
MAIN PUMP (D-TYPE)			O	O	70
CONTROL VALVE[2SV]	O	O	O	O	71
INLET SECTION	O	O	O	O	72
SPOOL SECTION(A)	O	O	O	O	73
SPOOL SECTION(B)	O	O	O	O	74
CONTROL VALVE FITTING	O	O	O	O	75
VALVE CONTROL[2SV]	O	O	O	O	76
VALVE CONTROL KNOB	O	O	O	O	77
HYDRAULIC LINE(MAIN)(1/3)(G-TYPE)	O	O			78
HYDRAULIC LINE(MAIN)(1/3)(D-TYPE)			O	O	79
HYDRAULIC LINE(MAIN)(2/3)	O	O	O	O	80
HYDRAULIC LINE(MAIN)(2/3) [OBT]<EXC>	O	O	O	O	81
HYDRAULIC LINE(MAIN)(3/3)	O	O	O	O	82
HYDRAULIC LINE(MAIN)(TOR-CON)(G-TYPE)		O			83
HYDRAULIC LINE(MAIN)(TOR-CON)(D-TYPE)				O	84
TILT CYLINDER	O	O	O	O	85
DECAL	O	O	O	O	86

CONTENTS
CHASSIS

A	FG30C6	C	FD30C6
B	FG30T6	D	FD30T6

SECTION	A	B	C	D	FIG. NO.
DECAL<EXB>	O	O	O	O	87
DECAL<EXC>	O	O	O	O	88
SERVICE TOOLS<EXB,EXC>	O	O	O	O	89

CONTENTS

MAST

A	FG30C6	C	FD30C6
B	FG30T6	D	FD30T6

SECTION	A	B	C	D	FIG. NO.
[VM39F]					
FORK [VM39F]	O	O	O	O	90
LIFT BRACKET [VM39F]	O	O	O	O	91
BACKREST [VM39F]	O	O	O	O	92
MAST [VM39F]	O	O	O	O	93
LIFT CYLINDER [VM39F]	O	O	O	O	94
MAST PIPING [VM39F]	O	O	O	O	95

Fig.1 ENGINE MOUNT
(F5031010)

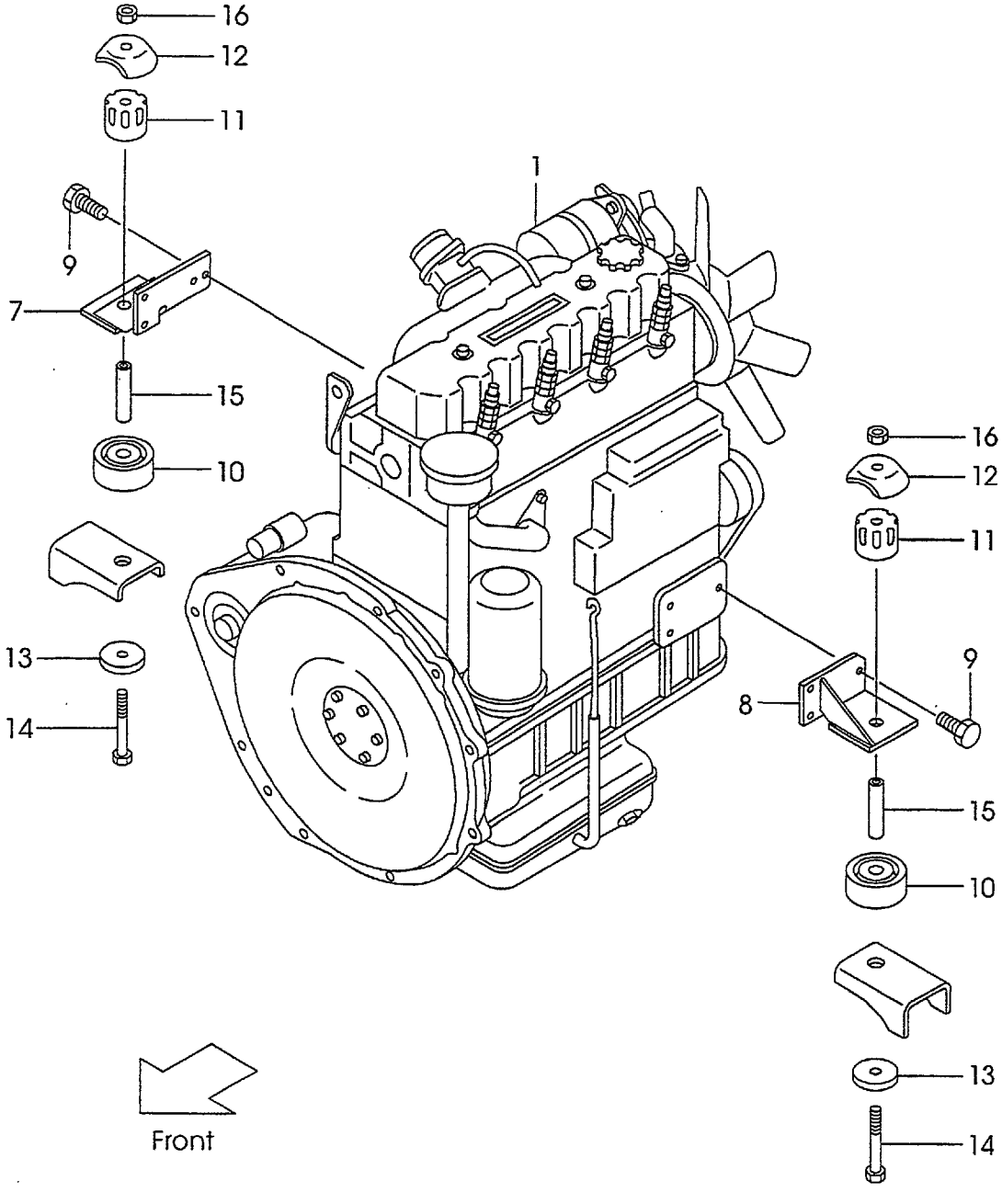

Fig.1
(F5031010)

A:FG30C6 C:FD30C6
B:FG30T6 D:FD30T6

Item No	Part No.	Mark	Description	Req'd	Remarks : Serial No.
1	236F1-00101		ENGINE H20	1	A
-	236G1-00101		ENGINE H20	1	B
-	238F1-00101		ENGINE C240	1	C,D
2	01400-00008	+	NUT	2	A,B
3	02010-00008	+	WASHER	2	A,B
4	02000-00008	+	WASHER	2	A,B
5	01100-05010	+	BOLT	1	A,B
6	02010-00005	+	WASHER	1	A,B
7	218G1-02351		BRACKET,RH	1	A,B
-	NO PART NO.		BRACKET,RH	1	C,D
					INC.ENGINE PART
8	218G1-02301		BRACKET,LH	1	A,B
-	NO PART NO.		BRACKET,LH	1	C,D
					INC.ENGINE PART
9	01218-10025		BOLT	7	A,B
-	NO PART NO.		BOLT	7	C,D
					INC.ENGINE PART
10	216G1-02111		RUBBER,UNDER	2	
11	214A1-02111		RUBBER,UPPER	2	
12	214A1-02121		CAP	2	
13	23651-02001		WASHER	2	
14	01103-10110		BOLT	2	
15	234A1-02071		COLLAR	2	
16	23651-02011		NUT	2	

Fig.2 AIR CLEANER(G-TYPE)
(F5031020)

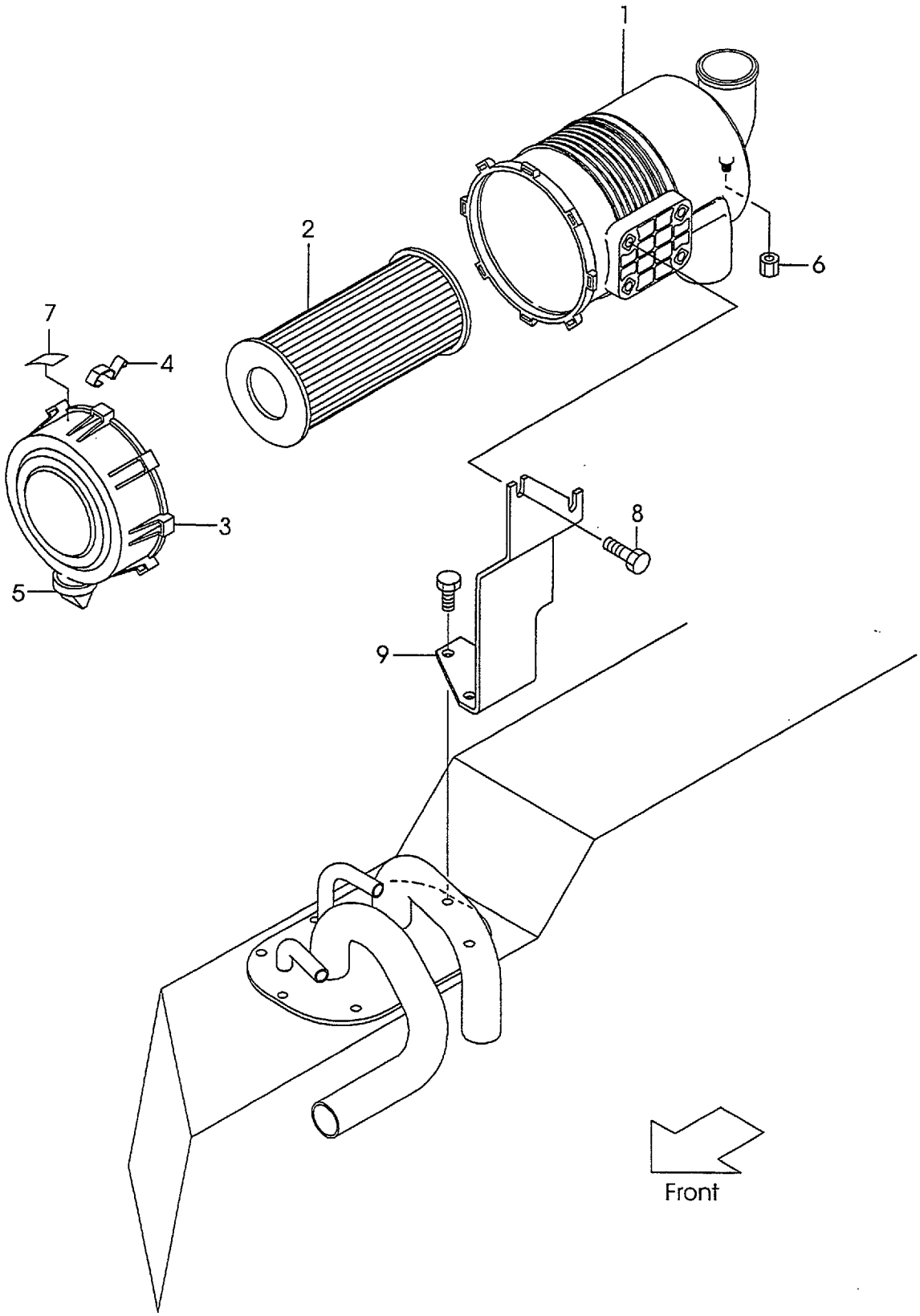

Fig.2
(F5031020)

A:FG30C6 C:FD30C6
B:FG30T6 D:FD30T6

Item No	Part No.	Mark	Description	Req'd	Remarks : Serial No.
A1	216G1-02451		CLEANER-ASSY,AIR	1	A,B
					INC.1-7
1	216G1-02481		BODY	1	A,B
2	256C1-08011		ELEMENT,AIR	1	A,B
3	216G1-02461		COVER	1	A,B
4	216G1-02471		LATCH	3	A,B
5	216G1-02491		VALVE,VACUATOR	1	A,B
6	53651-12551		CAP,NIPPLE	1	A,B
7	216G1-02501		LABEL	1	A,B
8	01183-08016		BOLT	4	A,B
9	237A1-02101		BRACKET,AIR-CLEANER	1	A,B

Fig.3 AIR CLEANER(D-TYPE)
(F5031040)

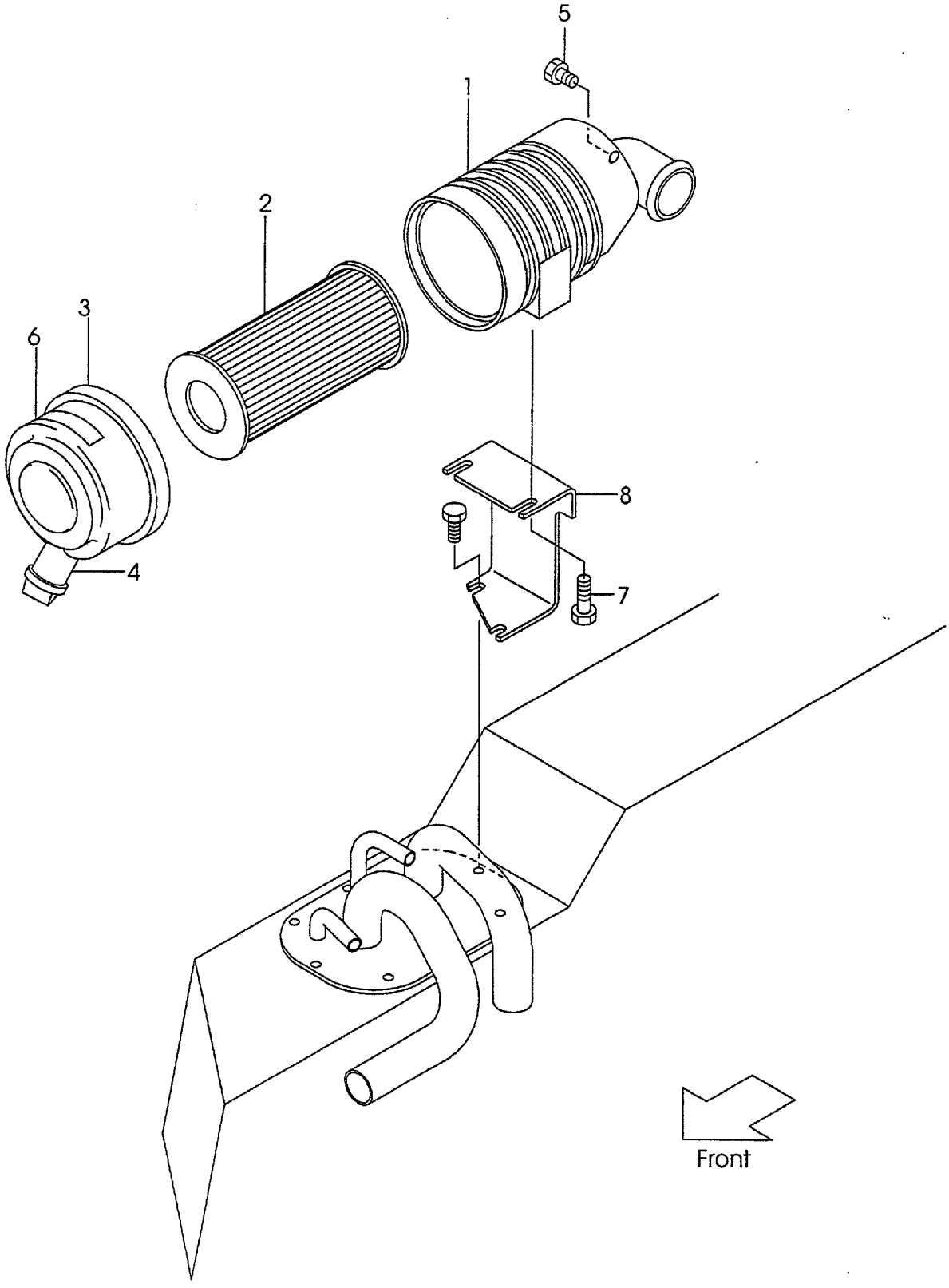

A:FG30C6 C:FD30C6
B:FG30T6 D:FD30T6

Fig.3
(F5031040)

Item No	Part No.	Mark	Description	Req'd	Remarks : Serial No.
A1	234A1-00101		CLEANER-ASSY,AIR	1	C,D
					INC.1-6
1	234A1-00111		BODY	1	C,D
2	256G1-08011		ELEMENT	1	C,D
3	256G1-08021		COVER	1	C,D
4	256A1-08031		VALVE,VACUATOR	1	C,D
5	53651-12551		CAP,NIPPLE	1	C,D
6	234A1-00121		LABEL	1	C,D
7	01183-08016		BOLT	2	C,D
8	239A1-02511		BRACKET,AIR-CLEANER	1	C,D

Fig.4 AIR DUCT(G-TYPE)
(F5031050)

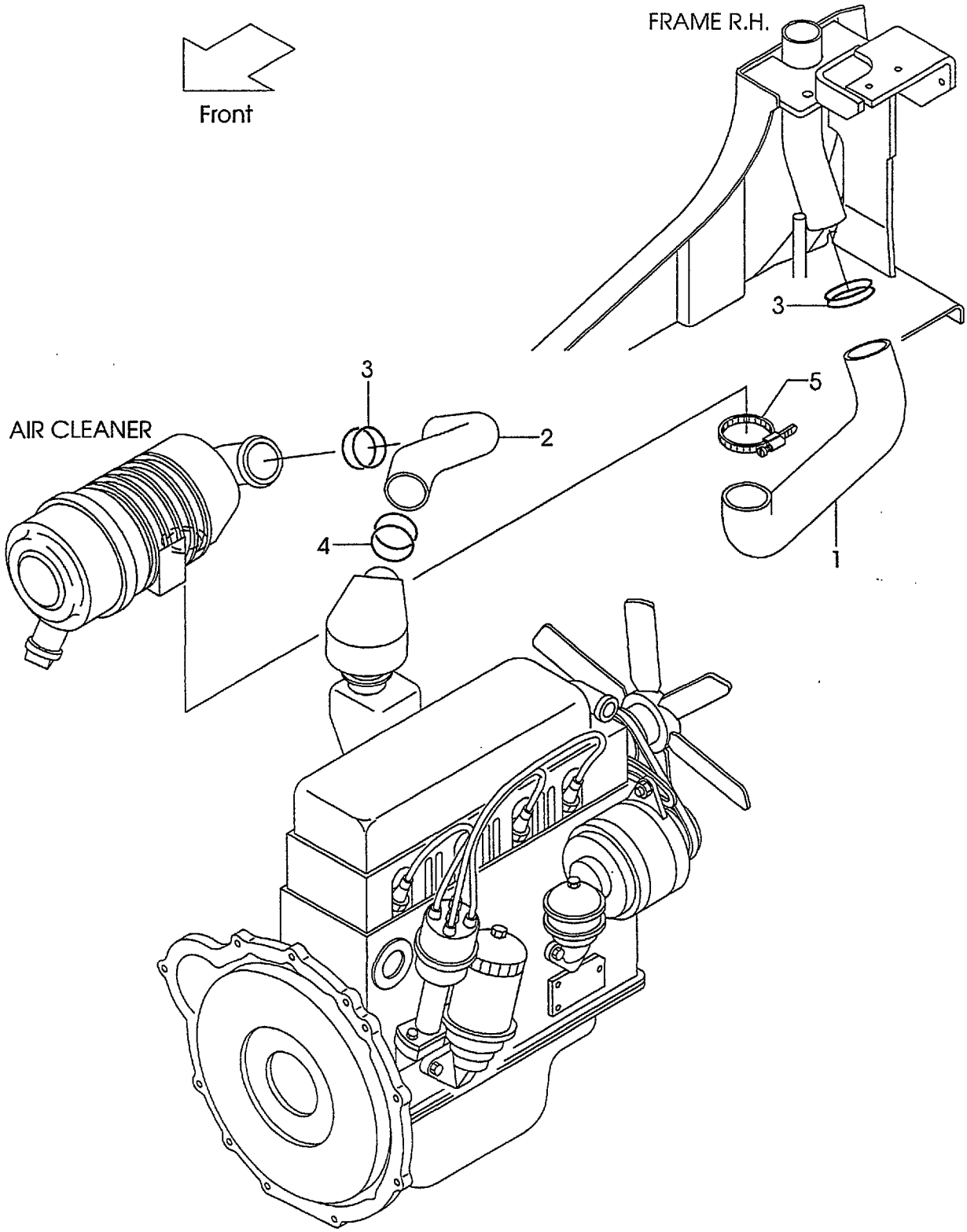

A:FG30C6 C:FD30C6
B:FG30T6 D:FD30T6

Fig.4
(F5031050)

Item No	Part No.	Mark	Description	Req'd	Remarks : Serial No.
1	218G1-02101		HOSE	1	A,B
2	233A1-02001		HOSE	1	A,B
3	04911-00060		CLIP	2	A,B
4	04911-00065		CLIP	1	A,B
5	224W4-52071		BAND	1	A,B

Fig.5 AIR DUCT(D-TYPE)
(F5031070)

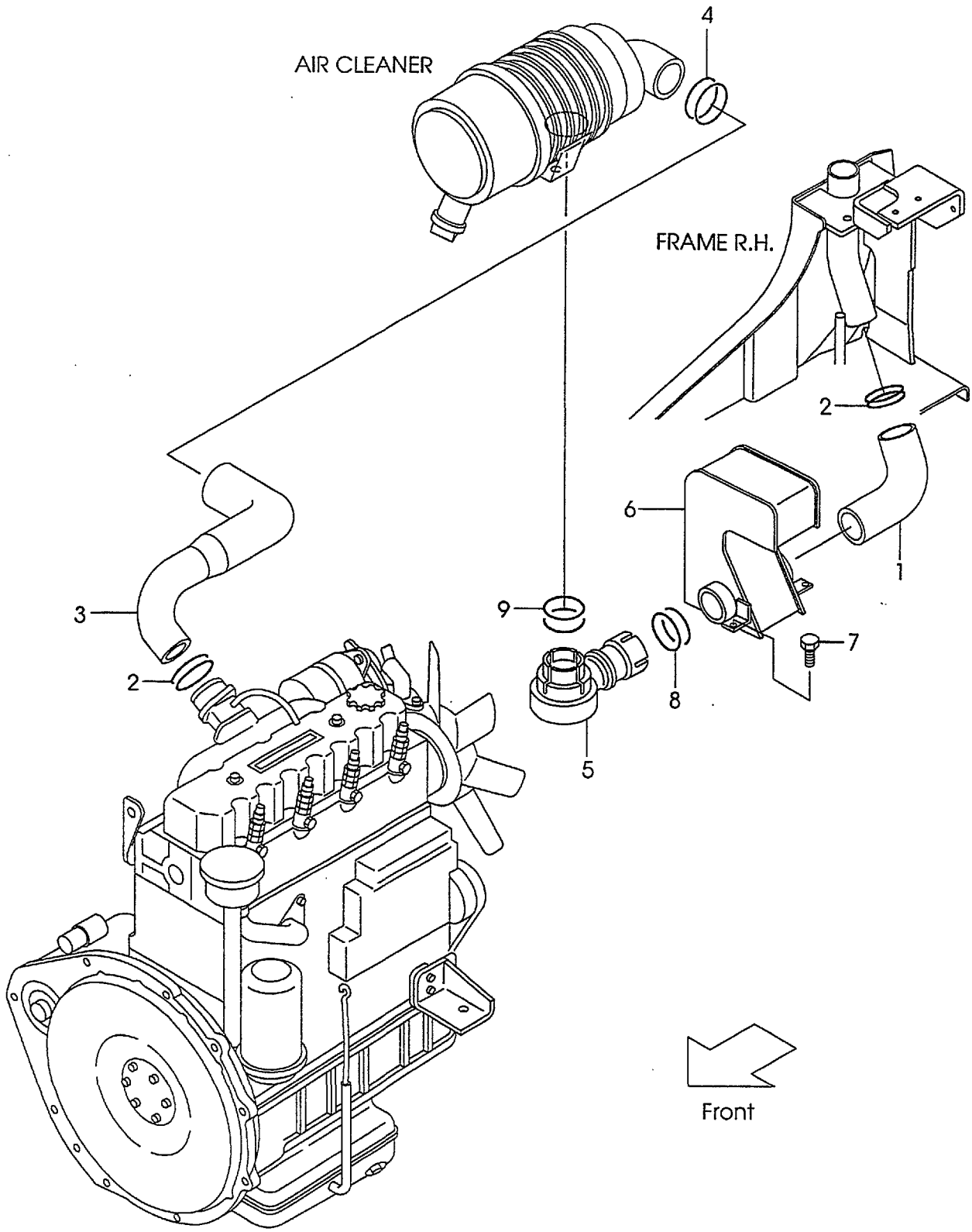

Fig.5
(F5031070)

A:FG30C6 C:FD30C6
B:FG30T6 D:FD30T6

Item No	Part No.	Mark	Description	Req'd	Remarks : Serial No.
1	217M1-02031		HOSE	1	C,D
2	04911-00060		CLIP	2	C,D
3	232A1-02001		HOSE	1	C,D
4	04911-00075		CLIP	1	C,D
5	234A1-02001		DUCT	1	C,D
6	217M1-02402		RESONATOR	1	C,D
7	01185-08016		BOLT	2	C,D
8	04911-00055		CLIP	1	C,D
9	04911-00070		CLIP	1	C,D

Fig.6 COOLING UNIT(G-TYPE)

(F5032110)

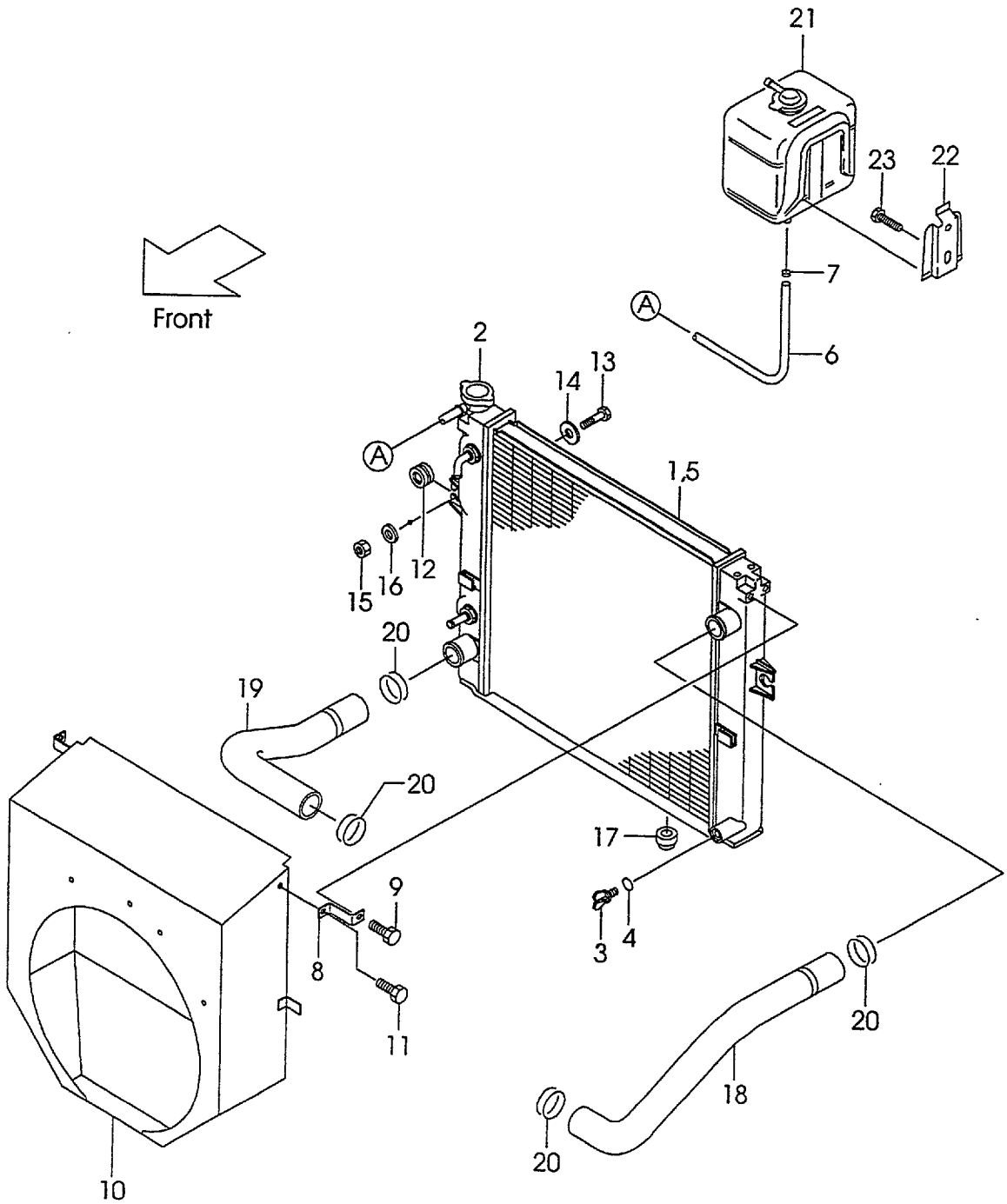

Fig.6
(F5032110)

A:FG30C6 C:FD30C6
B:FG30T6 D:FD30T6

Item No	Part No.	Mark	Description	Req'd	Remarks : Serial No.
A1	237A2-10101		RADIATOR-ASSY	1	A
					INC.1-7
-	237B2-10101		RADIATOR-ASSY	1	B
					INC.1-7
1	NO PART NO.	#	BODY	1	A,B
2	222A2-10211		CAP	1	A,B
3	234A2-12201		COOK	1	A,B
4	234A2-12211		O-RING	1	A,B
5	NO PART NO.	#	NUT	3	A,B
6	218M2-12301		HOSE	1	A,B
7	23772-12071		CLIP	1	A,B
8	239B2-12141		BRACKET	1	B
9	01185-08016		BOLT	1	B
10	237A2-12201		SHRAUD	1	A,B
11	01185-08016		BOLT	2	A,B
12	214A2-12001		RUBBER	2	A,B
13	214A2-12021		BOLT	2	A,B
14	22252-32251		WASHER	2	A,B
15	23652-12051		NUT	2	A,B
16	02000-00010		WASHER	2	A,B
17	214A2-12011		RUBBER	2	A,B
18	237A2-12001		HOSE,UPPER	1	A,B
19	237A2-12011		HOSE,LOWER	1	A,B
20	04911-00044		CLIP	4	A,B
21	214A2-12111		TANK,RESERVE	1	A,B
22	214A2-12141		BRACKET	1	A,B
23	214A2-42611		SCREW	2	A,B

Fig.7 COOLING UNIT(D-TYPE)

(F5032120)

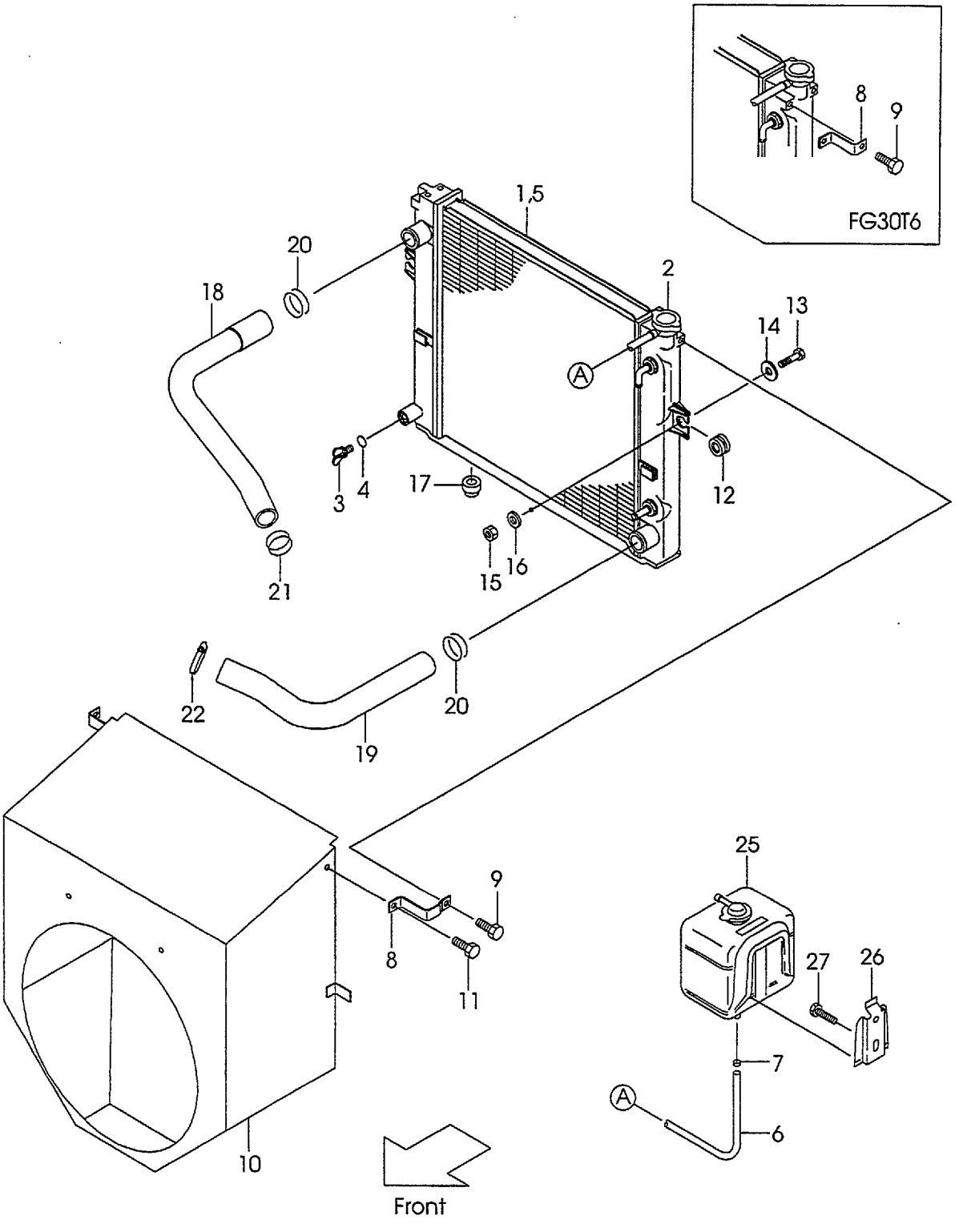

Fig.7
(F5032120)

A:FG30C6 C:FD30C6
B:FG30T6 D:FD30T6

Item No	Part No.	Mark	Description	Req'd	Remarks : Serial No.
A1	239A2-10101		RADIATOR-ASSY	1	C INC.1-7
-	239B2-10101		RADIATOR-ASSY	1	D INC.1-7
1	NO PART NO.	#	BODY	1	C,D
2	222A2-10211		CAP	1	C,D
3	234A2-12201		COOK	1	C,D
4	234A2-12211		O-RING	1	C,D
5	NO PART NO.	#	NUT	3	C,D
6	219M2-12301		HOSE	1	C,D
7	23772-12071		CLIP	1	C,D
8	239A2-12141		BRACKET	1	C
-	239B2-12141		BRACKET	1	D
9	01185-08016		BOLT	1	C,D
10	238F2-12201		SHRAUD	1	C,D
11	01185-08016		BOLT	2	C,D
12	214A2-12001		RUBBER	2	C,D
13	214A2-12021		BOLT	2	C,D
14	22252-32251		WASHER	2	C,D
15	23652-12051		NUT	2	C,D
16	02000-00010		WASHER	2	C,D
17	214A2-12011		RUBBER	2	C,D
18	238F2-12001		HOSE,UPPER	1	C,D
19	238F2-12011		HOSE,LOWER	1	C,D
20	04911-00044		CLIP	2	C,D
21	04911-00040		CLIP	1	C,D
22	217M2-12221		CLAMP	1	C,D
23	214A2-42331	+	CLIP	1	C,D
24	01185-08016	+	BOLT	1	C,D
25	214A2-12111		TANK,RESERVE	1	C,D
26	214A2-12141		BRACKET	1	C,D
27	214A2-42611		SCREW	2	C,D

Fig.8 FUEL SYSTEM(G-TYPE)
(F5032210)

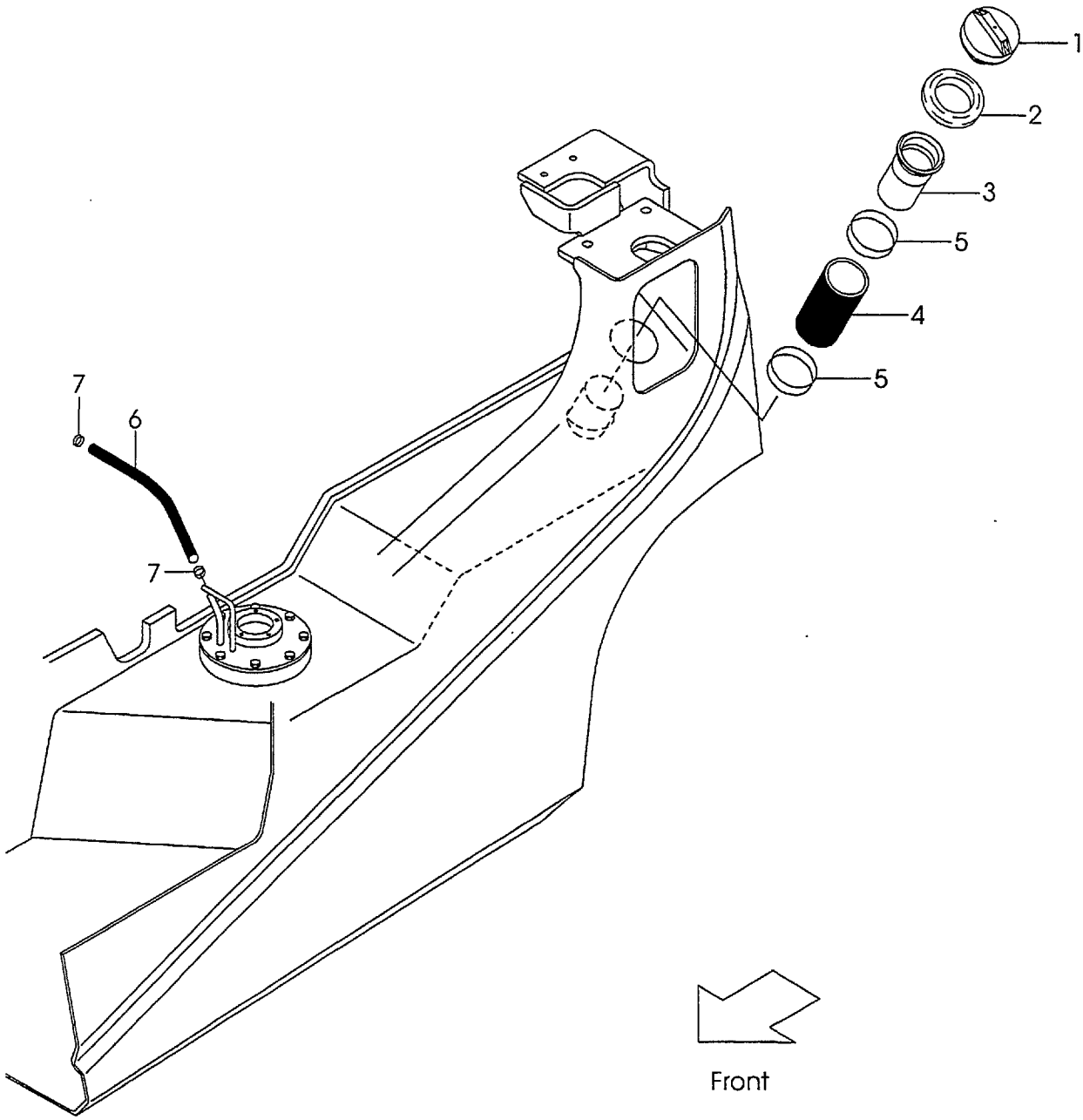

Fig.8

A:FG30C6 C:FD30C6
B:FG30T6 D:FD30T6

(F5032210)

Item No	Part No.	Mark	Description	Req'd	Remarks : Serial No.
1	216G2-22051		CAP,FUEL	1	A,B
2	216G2-22211		GROMMET	1	A,B
3	218G2-22001		PIPE,FUEL	1	A,B
4	218G2-22051		HOSE,FUEL	1	A,B
5	04911-00060		CLIP	2	A,B
6	21152-22151		HOSE,FUEL,7.5X300	1	A,B
7	22192-22091		CLIP	2	A,B

Fig.9 FUEL SYSTEM(D-TYPE)
(F5032230)

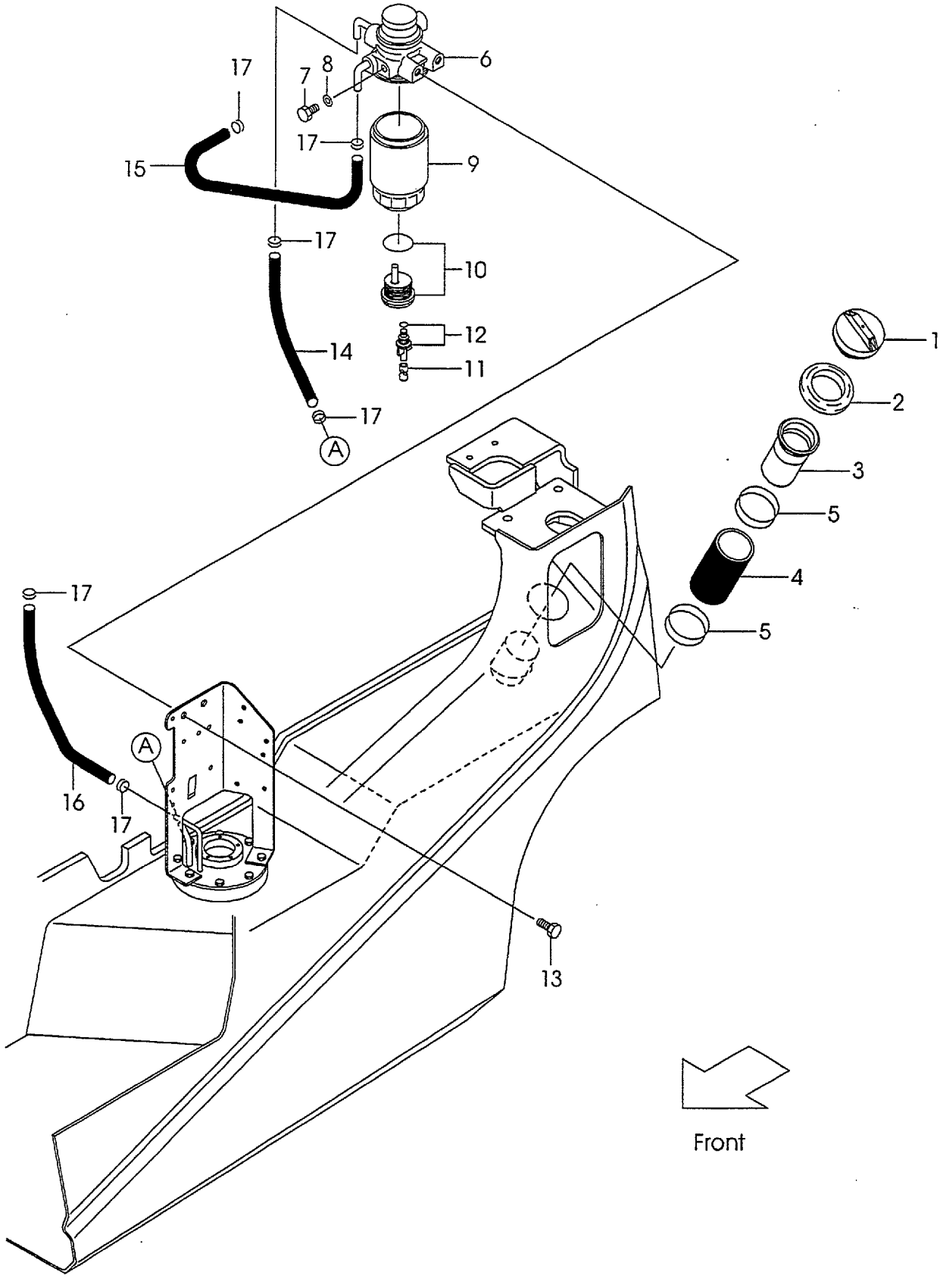

A:FG30C6 C:FD30C6
B:FG30T6 D:FD30T6

Fig.9
(F5032230)

Item No	Part No.	Mark	Description	Req'd	Remarks : Serial No.
1	216G2-22051		CAP,FUEL	1	C,D
2	216G2-22211		GROMMET	1	C,D
3	218G2-22001		PIPE,FUEL	1	C,D
4	218G2-22051		HOSE,FUEL	1	C,D
5	04911-00060		CLIP	2	C,D
A1	24662-22032		FILTER,FUEL	1	C,D
					INC.6-12
6	NO PART NO.	#	BODY	1	C,D
7	Z-8-94132-674-0		PLUG	1	C,D
8	Z-8-94132-675-0		GASKET	1	C,D
9	NO PART NO.	#*	CARTRIDGE	1	C,D
A2	Z-8-94367-294-0		SENSOR	1	C,D
					INC.10-12
10	NO PART NO.	#*	SENSOR	1	C,D
11	Z-8-94367-956-0	*	HOSE	1	C,D
12	Z-8-94367-957-0	*	PLUG	1	C,D
13	01183-08016		BOLT	2	C,D
14	24662-22131		HOSE,FUEL,7.5X270	1	C,D
15	214A2-22071		HOSE,FUEL,7.5X550	1	C,D
16	24662-22141		HOSE,FUEL,6.5X380	1	C,D
17	22192-22091		CLIP	6	C,D
K1	Z-8-94332-955-0		KIT,CARTRIDGE	1	C,D
					INC.9-12

Fig.10 EXHAUST SYSTEM(G-TYPE)

(F5032310)

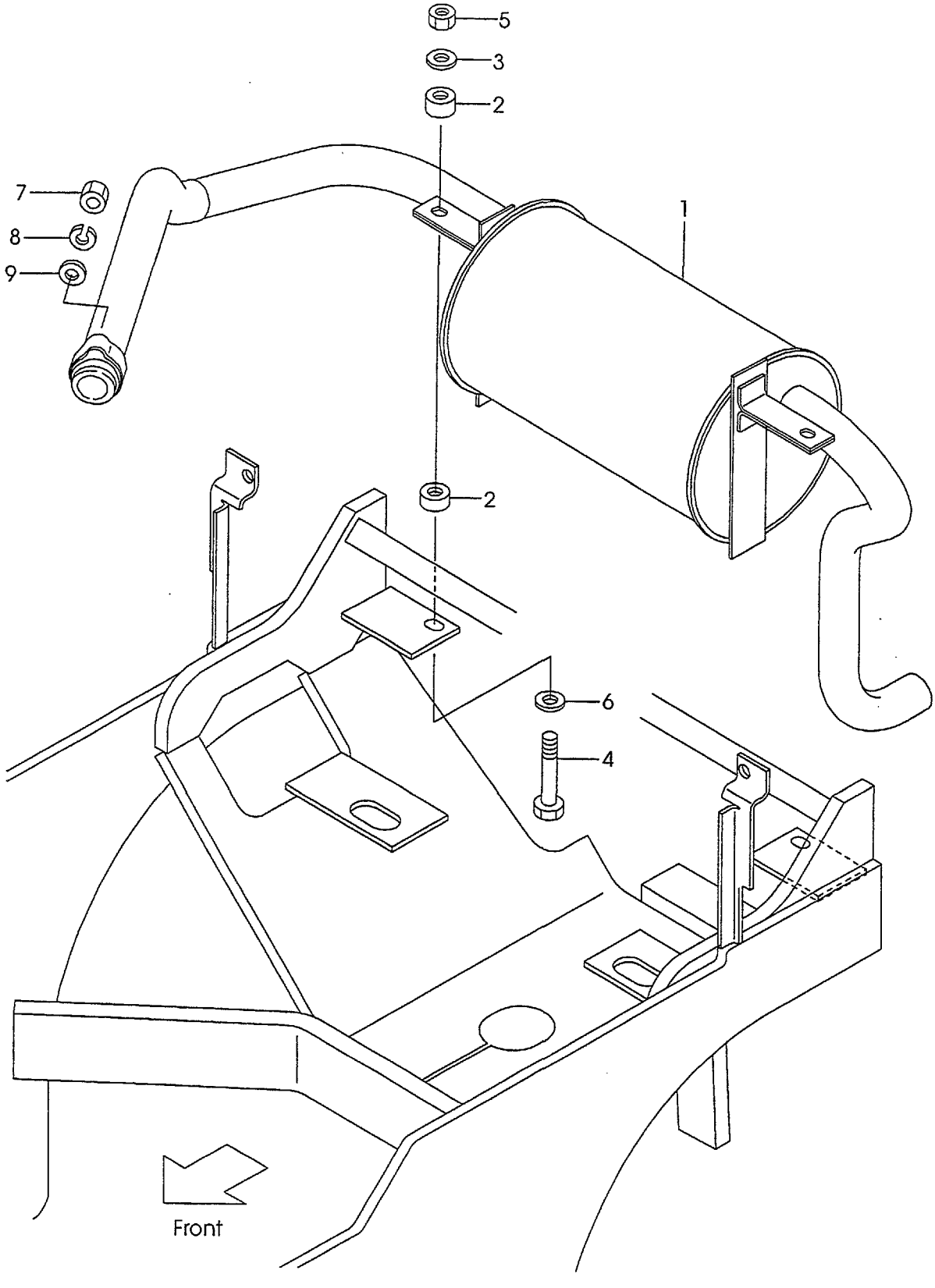

A:FG30C6 C:FD30C6
B:FG30T6 D:FD30T6

Fig.10
(F5032310)

Item No	Part No.	Mark	Description	Req'd	Remarks : Serial No.
1	237F2-30101		MUFFLER	1	A,B
2	22252-32241		RUBBER	4	A,B
3	22252-32251		WASHER	2	A,B
4	21232-32551		BOLT	2	A,B
5	23652-12051		NUT	2	A,B
6	02000-00010		WASHER	2	A,B
7	01400-20008		NUT	2	A,B
8	02010-00008		WASHER	2	A,B
9	02000-00008		WASHER	2	A,B

Fig.11 EXHAUST SYSTEM(D-TYPE)
(F5032320)

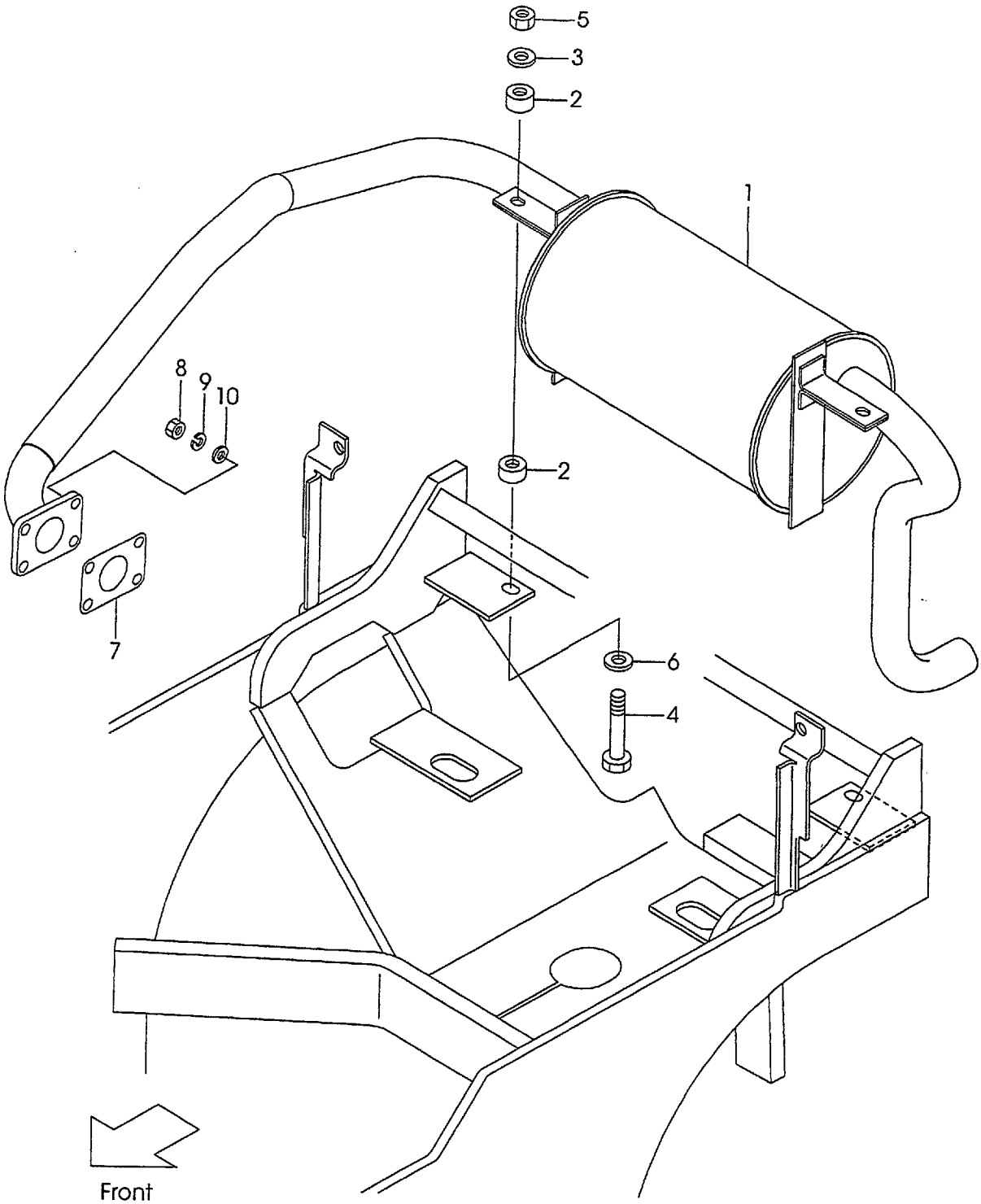

Fig.11
(F5032320)

A:FG30C6 C:FD30C6
B:FG30T6 D:FD30T6

Item No	Part No.	Mark	Description	Req'd	Remarks : Serial No.
1	238P2-30101		MUFFLER	1	C,D
2	22252-32241		RUBBER	4	C,D
3	22252-32251		WASHER	2	C,D
4	21232-32551		BOLT	2	C,D
5	23652-12051		NUT	2	C,D
6	02000-00010		WASHER	2	C,D
7	224G2-32011		GASKET	1	C,D
8	01400-20010		NUT	4	C,D
9	02010-00010		WASHER	4	C,D
10	02000-00010		WASHER	4	C,D

Fig.12 COMBINATION METER
(F5032410)

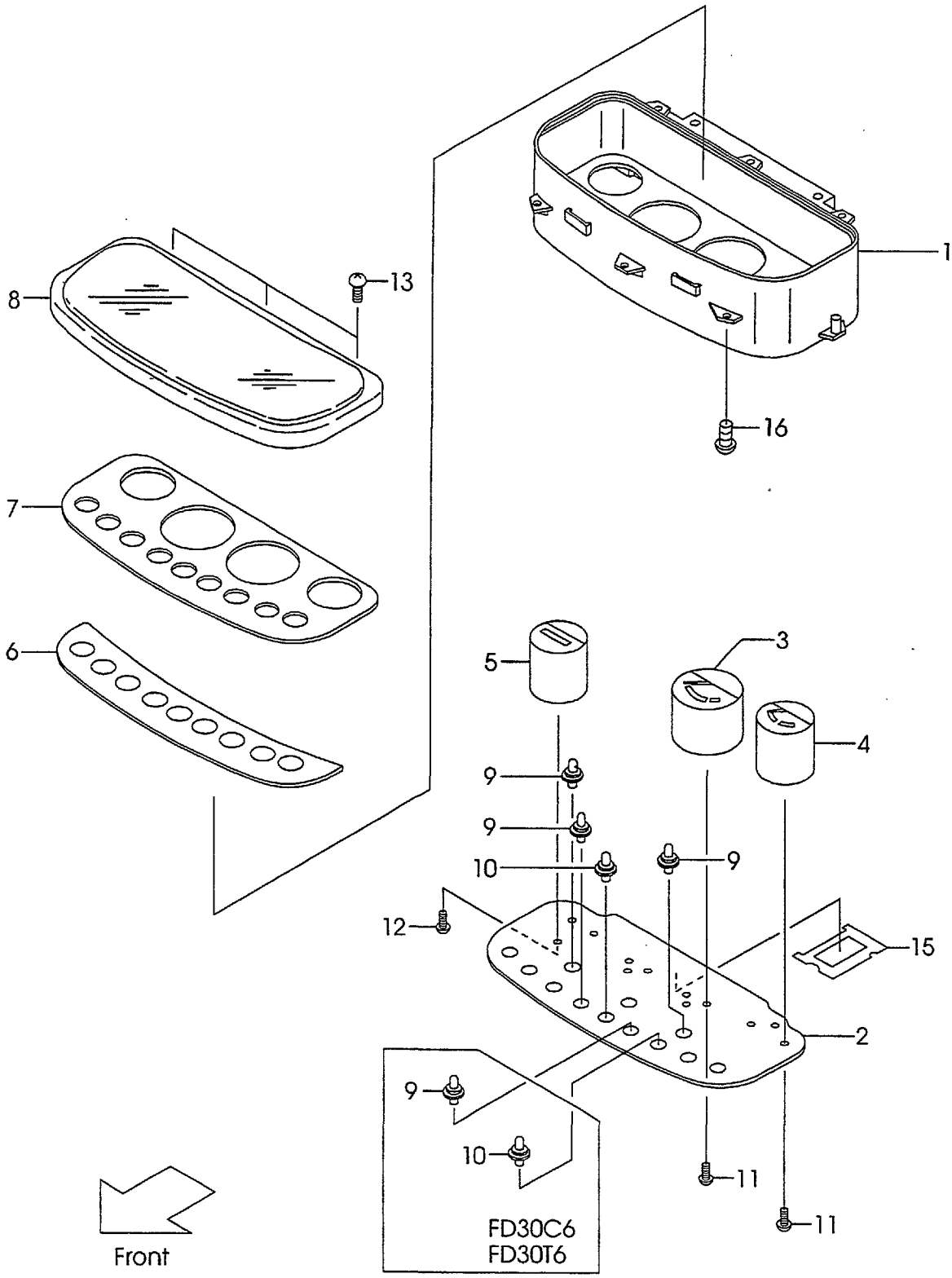

Fig.12

(F5032410)

A:FG30C6 C:FD30C6
B:FG30T6 D:FD30T6

Item No	Part No.	Mark	Description	Req'd	Remarks : Serial No.
A1	216G2-40301		METER-ASSY,COMBI	1	A,B INC.1-15
-	217G2-40301		METER-ASSY,COMBI	1	C,D INC.1-15
1	216G2-43201		HOUSING	1	
2	216G2-43211		CIRCUIT	1	A,B
-	216G2-43221		CIRCUIT	1	C,D
3	216G2-43231		GAUGE,TEMP	1	
4	216G2-43241		GAUGE,OIL-TEMP	1	
5	216G2-43261		METER,HOUR	1	
6	216G2-43271		LENS	1	
7	216G2-43281		PLATE	1	
8	216G2-43301		COVER	1	
9	222A2-42331		SOCKET	3	A,B
-	222A2-42331		SOCKET	4	C,D
10	222A2-42401		SOCKET	1	A,B
-	222A2-42401		SOCKET	2	C,D
11	229F2-42421		SCREW	6	
12	229F2-42431		SCREW	3	
13	222A2-42361		SCREW	3	
14	516G6-22031		GASKET	1	
15	216G2-43161		GASKET	1	
16	222A2-42031		SCREW	5	
17	239A2-42201	+	WIRE-HARNESS,F.GUARD	1	A,C
-	239B2-42201	+	WIRE-HARNESS,F.GUARD	1	B,D

Fig.13 STEERING SHAFT COVER

(F5032420)

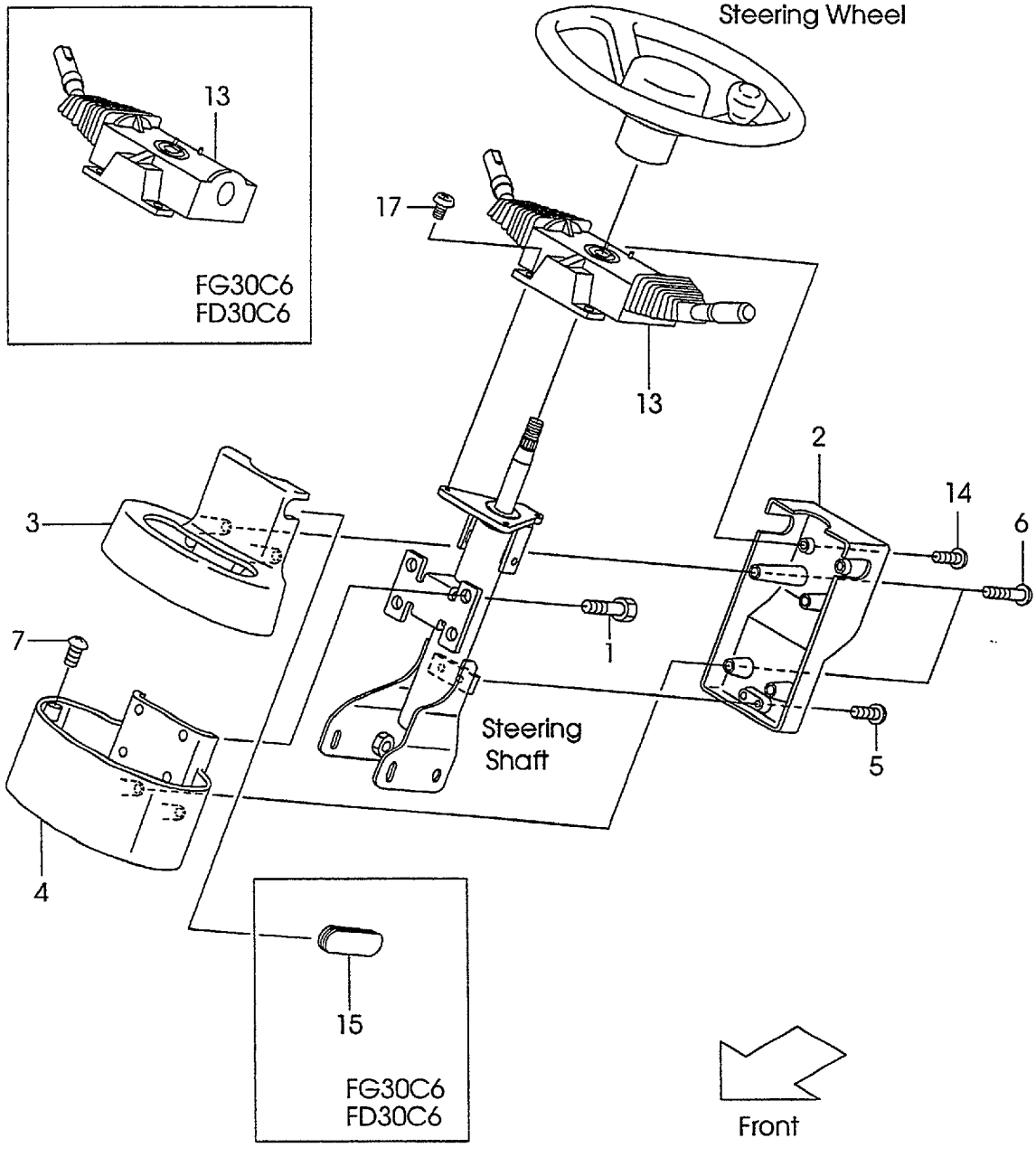

A:FG30C6 C:FD30C6
B:FG30T6 D:FD30T6

Fig.13
(F5032420)

Item No	Part No.	Mark	Description	Req'd	Remarks : Serial No.
1	01185-06016		BOLT	4	
2	239A4-12501		COVER,A	1	
3	239A4-12511		COVER,B	1	
4	239A4-12521		COVER,C	1	
5	214A6-42771		SCREW	2	
6	222A2-42031		SCREW	4	
7	216G4-12091		SCREW	2	
8	04913-11200		BAND	1	
9	216G2-42131		BAND	14	
10	04913-10100		BAND	6	
11	04913-11100		BAND	2	
12	04913-10200		BAND	2	
13	239A2-40501		SWITCH,COMBINATION	1	A,C
-	209K2-40501		SWITCH,COMBINATION	1	B,D
14	209K2-43001		SCREW	2	
15	239A4-12541		COVER	1	A,C
16	229F6-42201	+	SEAL	1	
17	01033-05014		SCREW	3	

Fig.14 ELECTRIC PARTS(G-TYPE)

(F5032430)

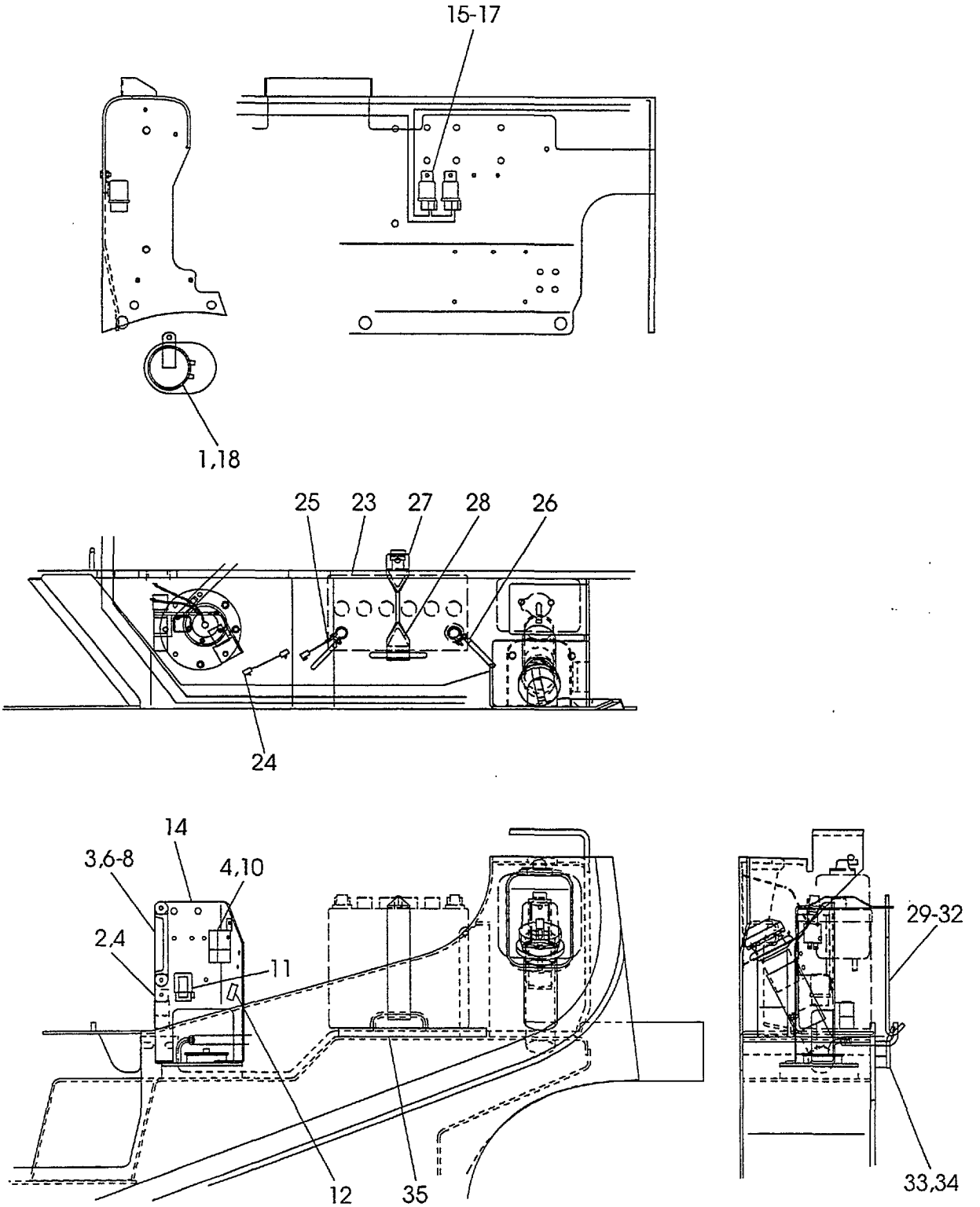

A:FG30C6 C:FD30C6
B:FG30T6 D:FD30T6

Fig.14
(F5032430)

Item No	Part No.	Mark	Description	Req'd	Remarks : Serial No.
1	216G2-43651		HORN	1	A,B
2	216G2-43711		UNIT,FLASHER	1	A,B
3	214A2-42621		SCREW	2	A,B
4	214A2-42611		SCREW	2	A,B
5	04913-10200	+	BAND	2	A,B
6	235C2-40301		BOX,FUSE	1	A,B
					INC.7,8
7	214T2-42311		FUSE,10A	7	A,B
8	214T2-42321		FUSE,30A	1	A,B
9	216G2-42312	+	SWITCH,STATER	1	A,B
10	217G2-42301		RELAY,STATER	1	A,B
11	228F2-42131		RELAY,AUTO-CHOKE	1	A,B
12	21152-42091		DIODE	1	A,B
13	234B2-42201	+	TIE,PUSH-MOUNT	1	A,B
14	218G2-42001		BRACKET	1	A,B
15	26062-42881		RELAY,12V	2	A,B
16	239A5-42381		BOLT	2	A,B
17	01400-00006		NUT	2	A,B
18	01185-08016		BOLT	1	A,B
19	23232-42072	+	SWITCH,STOP-LAMP	1	A,B
20	237A2-42211	+	WIRE-HARNESS,ENGINE	1	A
-	237B2-42211	+	WIRE-HARNESS,ENGINE	1	B
21	214A2-42331	+	CLIP	3	A,B
22	230C2-42201	+	DIODE	2	B
23	225R2-42001		BATTERY	1	A,B
24	25592-42081		WIRE,LINK	1	A,B
25	237A2-42151		CABLE,BATTERY(+)	1	A,B
26	212T2-42311		CABLE,BATTERY(-)	1	A,B
27	216G2-42071		HOLDER	1	A,B
28	216G2-43111		RUBBER	2	A,B
29	256A2-42171		BOLT	1	A,B
30	01420-00006		NUT	1	A,B
31	02010-00006		WASHER	1	A,B
32	23452-42181		WASHER	1	A,B
33	218G2-42101		HOOK	1	A,B
34	01185-08016		BOLT	1	A,B
35	239A2-42031		RUBBER	1	A,B

Fig.15 ELECTRIC PARTS(D-TYPE)

(F5032440)

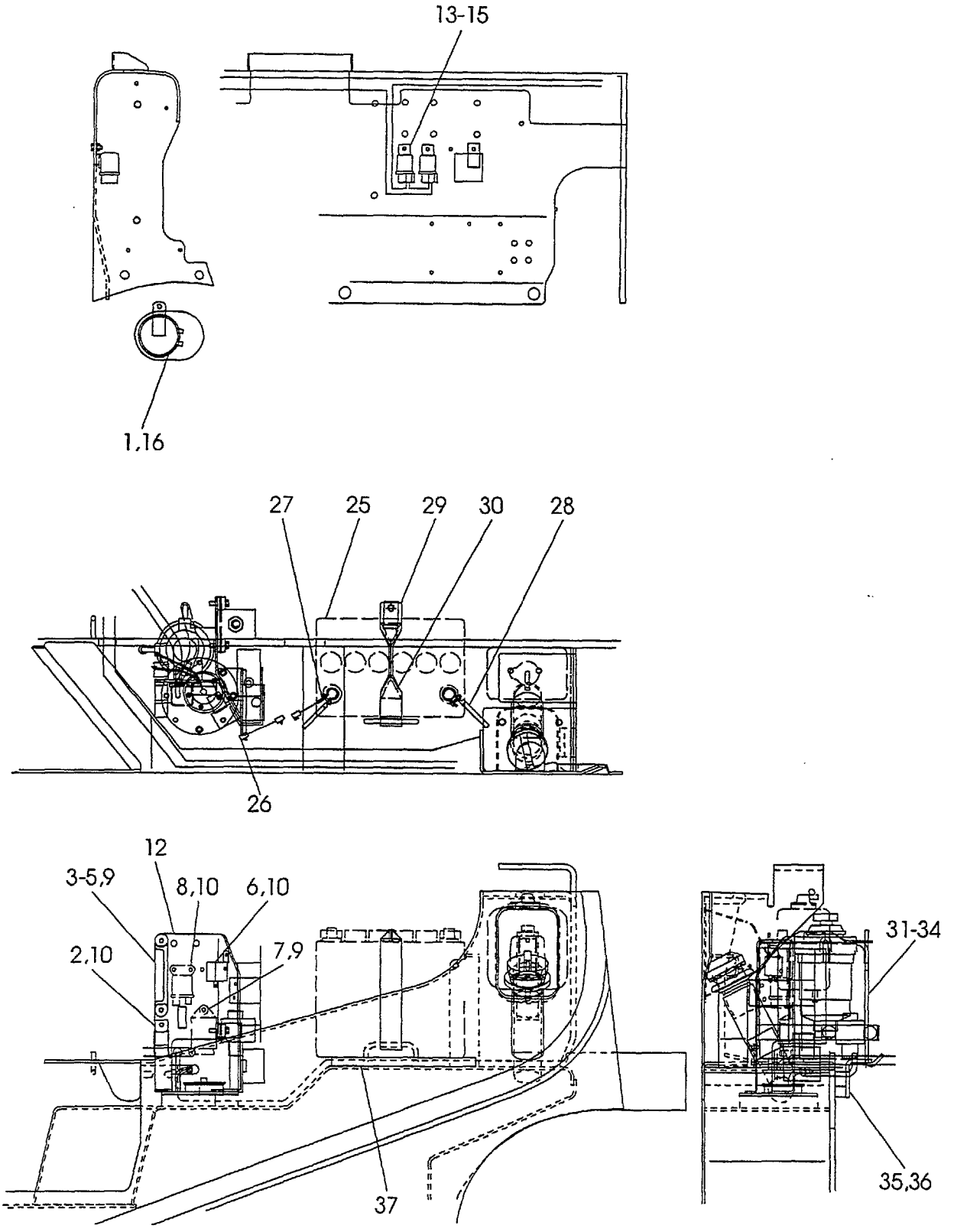

A:FG30C6 C:FD30C6
B:FG30T6 D:FD30T6

Fig.15
(F5032440)

Item No	Part No.	Mark	Description	Req'd	Remarks : Serial No.
1	216G2-43651		HORN	1	C,D
2	216G2-43711		UNIT,FLASHER	1	C,D
3	235C2-40301		BOX,FUSE	1	C,D
					INC.4,5
4	214T2-42311		FUSE,10A	7	C,D
5	214T2-42321		FUSE,30A	1	C,D
6	217G2-42301		RELAY,STATER	1	C,D
7	21152-42013		TIMER,QOS-3	1	C,D
8	21152-42021		RELAY,GLOW-PLUG	1	C,D
9	214A2-42621		SCREW	3	C,D
10	214A2-42611		SCREW	4	C,D
11	216G2-42312	+	SWITCH,STATER	1	C,D
12	218G2-42001		BRACKET	1	C,D
13	26062-42881		RELAY,12V	2	C,D
14	239A5-42381		BOLT	2	C,D
15	01400-00006		NUT	2	C,D
16	01185-08016		BOLT	1	C,D
17	23232-42072	+	SWITCH,STOP-LAMP	1	C,D
18	238F2-42212	+	WIRE-HARNESS,ENGINE	1	C
-	238G2-42212	+	WIRE-HARNESS,ENGINE	1	D
19	214A2-42331	+	CLIP	5	C,D
20	230C2-42201	+	DIODE	2	D
21	23652-44001	+	UNIT,SENDING	1	C,D
22	01100-06010	+	BOLT	1	C,D
23	02010-00006	+	WASHER	1	C,D
24	02000-00006	+	WASHER	1	C,D
25	58106-31011		BATTERY	1	C,D
-	230C2-42301		BATTERY	1	C,D
26	25592-42081		WIRE,LINK	1	C,D
27	217G2-42151		CABLE,BATTERY(+)	1	C,D
28	238A2-42151		CABLE,BATTERY(-)	1	C,D
29	217G2-42021		HOLDER	1	C,D
30	216G2-43111		RUBBER	2	C,D
31	256A2-42171		BOLT	1	C,D
32	01420-00006		NUT	1	C,D
33	02010-00006		WASHER	1	C,D
34	23452-42181		WASHER	1	C,D
35	239A2-42101		HOOK	1	C,D
36	01185-08016		BOLT	1	C,D
37	239A2-42031		RUBBER	1	C,D

Fig.16 LIGHT UNIT
(F5032450)

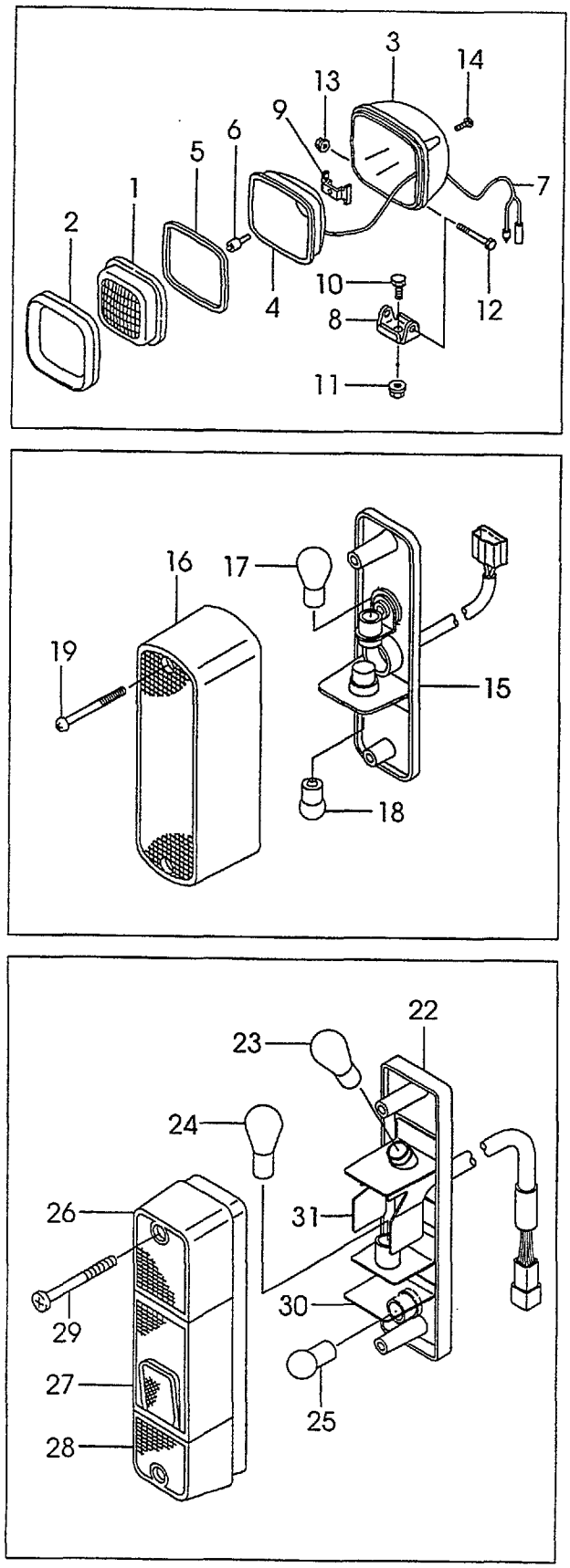

A:FG30C6 C:FD30C6
B:FG30T6 D:FD30T6

Fig.16
(F5032450)

Item No	Part No.	Mark	Description	Req'd	Remarks : Serial No.
A1	216G2-40602		LAMP-ASSY,HEAD	2	INC.1-14
1	216G2-43502		LENS	2	
2	216G2-43631		RIM	2	
3	216G2-43511		HOUSING	2	
4	216G2-43521		REFLECTOR	2	
5	216G2-43531		GASKET	2	
6	216G2-43542		BULB,12V/55W	2	
7	216G2-43551		WIRE,LEAD	2	
8	216G2-43562		BRACKET	2	
9	216G2-43571		SPRING	2	
10	216G2-43582		BOLT	2	
11	216G2-43592		NUT	2	
12	216G2-43602		BOLT	2	
13	216G2-43611		NUT	2	
14	216G2-43622		SCREW	8	
A2	216G2-40701		LAMP-ASSY,F.COMBI	2	INC.15-19
15	NO PART NO.	#	BODY	2	
16	216G2-40731		LENS	2	
17	216G2-40711		BULB,12V/27W	2	
18	216G2-40721		BULB,12V/10W	2	
19	NO PART NO.		SCREW	8	
20	239A2-42221	+	WIRE-HARNESS,HG	2	
21	04913-11100	+	BAND	2	
A3	214A2-40203		LAMP-ASSY,R.COMBI	2	INC.22-31
22	NO PART NO.	#	BODY	2	
23	210F2-42011		BULB,12V/23W	2	
24	214A2-44501		BULB,23W/8W	2	
25	210F2-42031		BULB,12V/10W	2	
26	210F2-42201		LENS,PLASTIC	2	
27	210F2-42211		LENS,PLASTIC	2	
28	210F2-42221		LENS,PLASTIC	2	
29	01030-05065		SCREW	4	
30	210F2-42231		SHADE	2	
31	214A2-44511		SHADE	2	

Fig.17 BACK BUZZER
(F5032460)

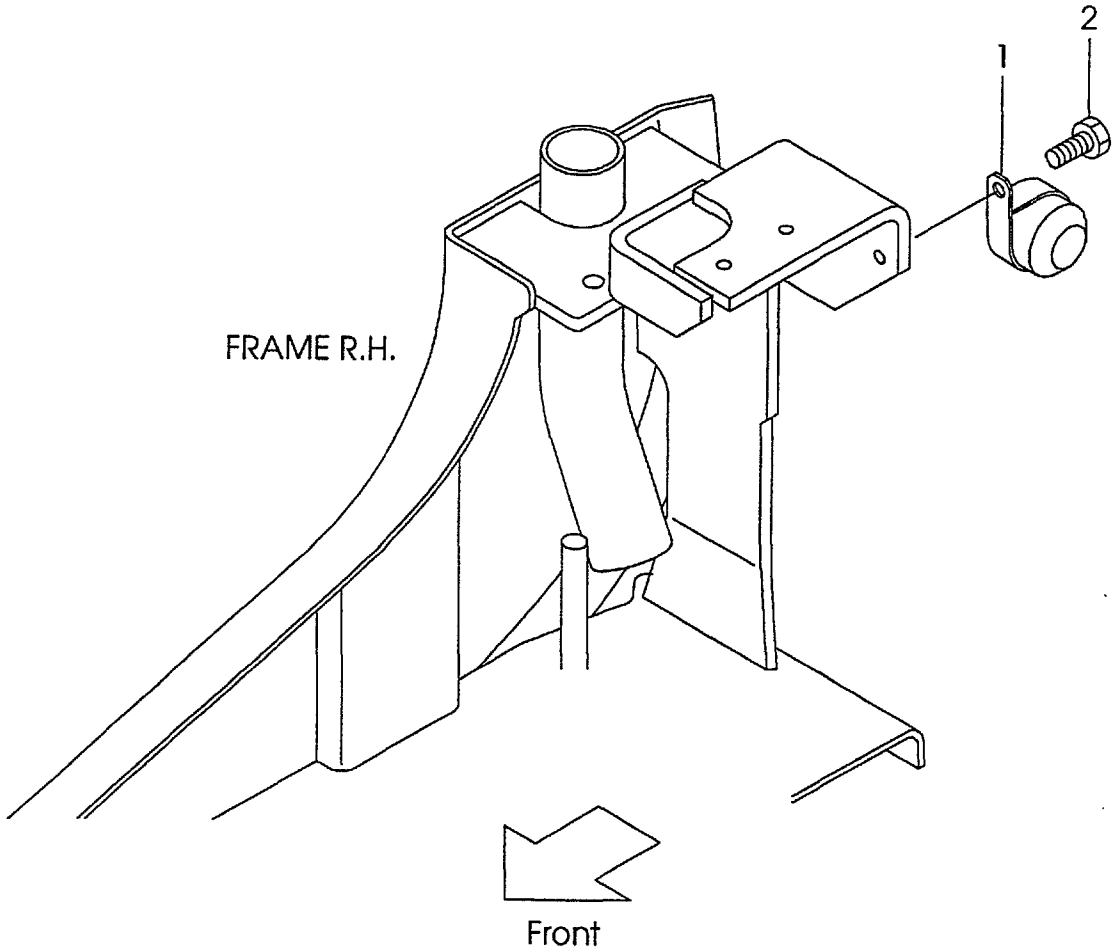

A:FG30C6 C:FD30C6
B:FG30T6 D:FD30T6

Item No	Part No.	Mark	Description	Req'd	Remarks : Serial No.
1	234A2-42301		BUZZER,BACK	1	
2	01185-08016		BOLT	1	

Fig.18 DRIVE UNIT MOUNT(C-TYPE)

(F5032510)

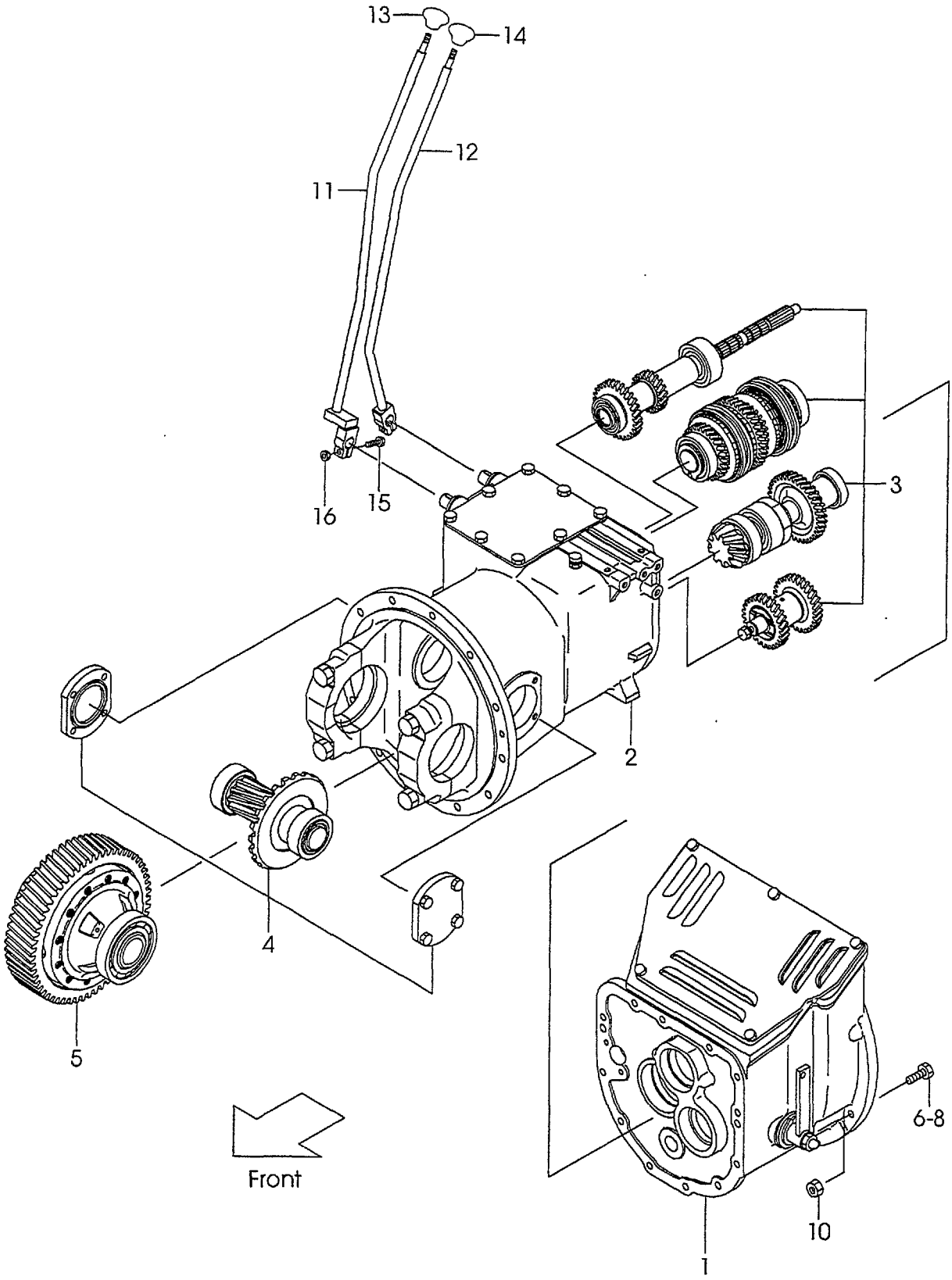

A:FG30C6 C:FD30C6
B:FG30T6 D:FD30T6

Fig.18
(F5032510)

Item No	Part No.	Mark	Description	Req'd	Remarks : Serial No.
A1	136F2-50001		UNIT-ASSY,DRIVE	1	A,C (36F-25)INC.1-5
1	NO PART NO.		CLUTCH	1	A,C SEE FIG.19
2	NO PART NO.		MISSION CASE	1	A,C SEE FIG.20
3	NO PART NO.		MISSION GEAR	1	A,C SEE FIG.21
4	NO PART NO.		REDUCTION	1	A,C SEE FIG.28
5	NO PART NO.		DIFFERENTIAL	1	A,C SEE FIG.29
6	01184-10040		BOLT	1	A,C
7	01184-10050		BOLT	5	A
-	01184-10030		BOLT	2	C
8	01184-10035		BOLT	2	A
-	01184-10035		BOLT	5	C
10	01400-00010		NUT	5	A
11	239A2-52001		LEVER,SPEED CHANGE	1	A,C
12	239A2-52016		LEVER,DIRECT CHANGE	1	A,C
13	214A2-52002		KNOB,SPEED	1	A,C
14	214A2-52012		KNOB,DIRECTION	1	A,C
15	01183-08035		BOLT	2	A,C
16	01400-00008		NUT	2	A,C

Fig.19 CLUTCH(C-TYPE)
(F5032520)

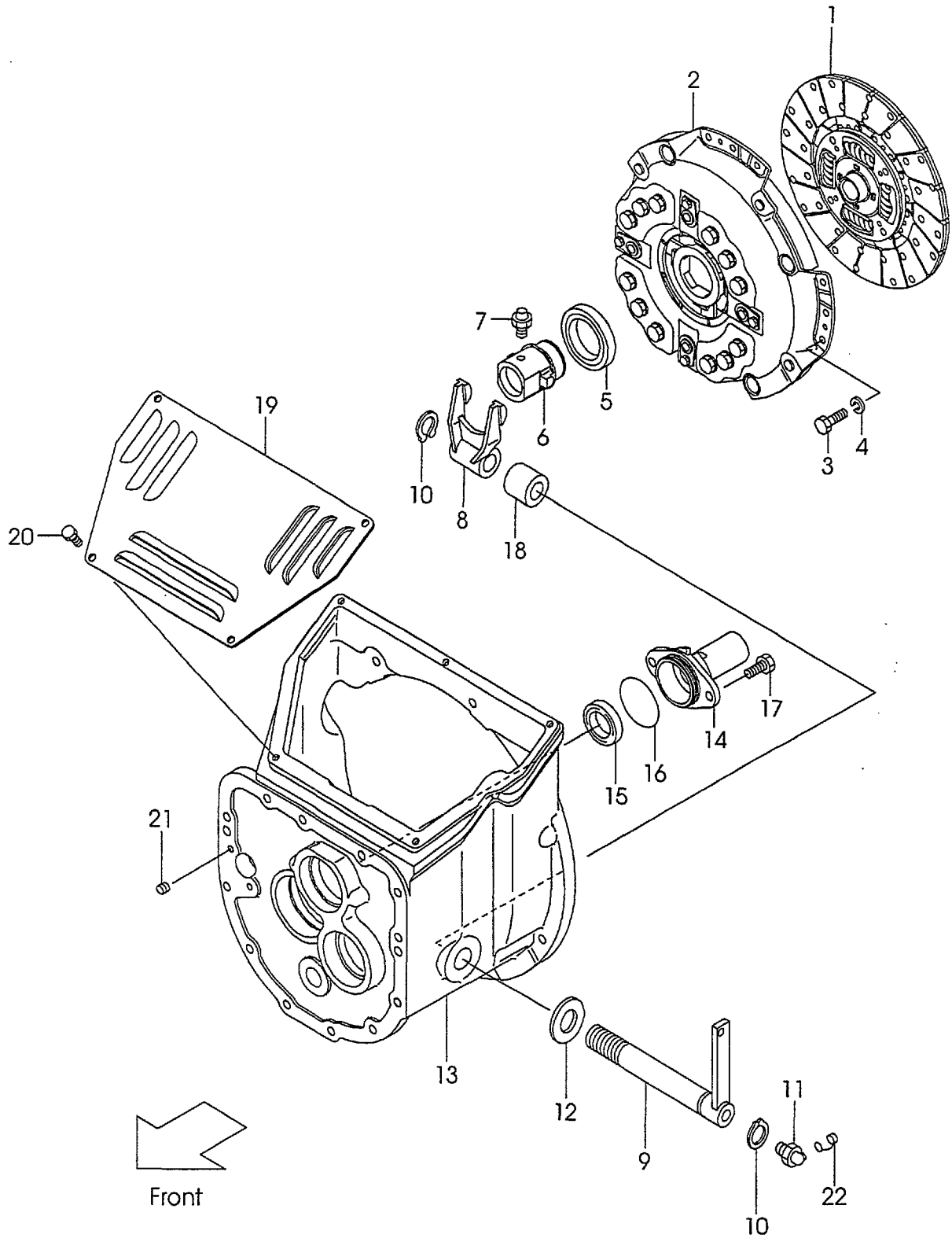

A:FG30C6 C:FD30C6
B:FG30T6 D:FD30T6

Fig.19
(F5032520)

Item No	Part No.	Mark	Description	Req'd	Remarks : Serial No.
1	134A3-10211		DISK,CLUTCH	1	A,C
2	131A3-10201		COVER,CLUTCH	1	A,C
3	01103-08016		BOLT	12	A,C
4	02011-00008		WASHER	12	A,C
5	15533-10301		BEARING	1	A,C
6	134A3-12011		BEARING	1	A,C
7	04901-00100		FITTING	1	A,C
8	114A3-12012		YOKE	1	A,C
9	114A3-10501		SHAFT	1	A,C
10	02100-00025		RING,SNAP	2	A,C
11	04901-00160		FITTING	1	A,C
12	02000-00024		WASHER	1	A,C
13	134A3-12001		HOUSING	1	A,C
14	134A3-12021		RETAINER	1	A,C
15	134A3-12031		SEAL,OIL	1	A,C
16	03310-00600		O-RING	1	A,C
17	01213-10025		BOLT	2	A,C
18	12003-12021		BUSHING	2	A,C
19	124G3-12011		COVER,CLUTCH	1	A,C
20	01183-08016		BOLT	5	A,C
21	01066-08008		PLUG	2	A,C
22	22199-12401		CAP	1	A,C

Fig.20 MISSION CASE(C-TYPE)

(F5032530)

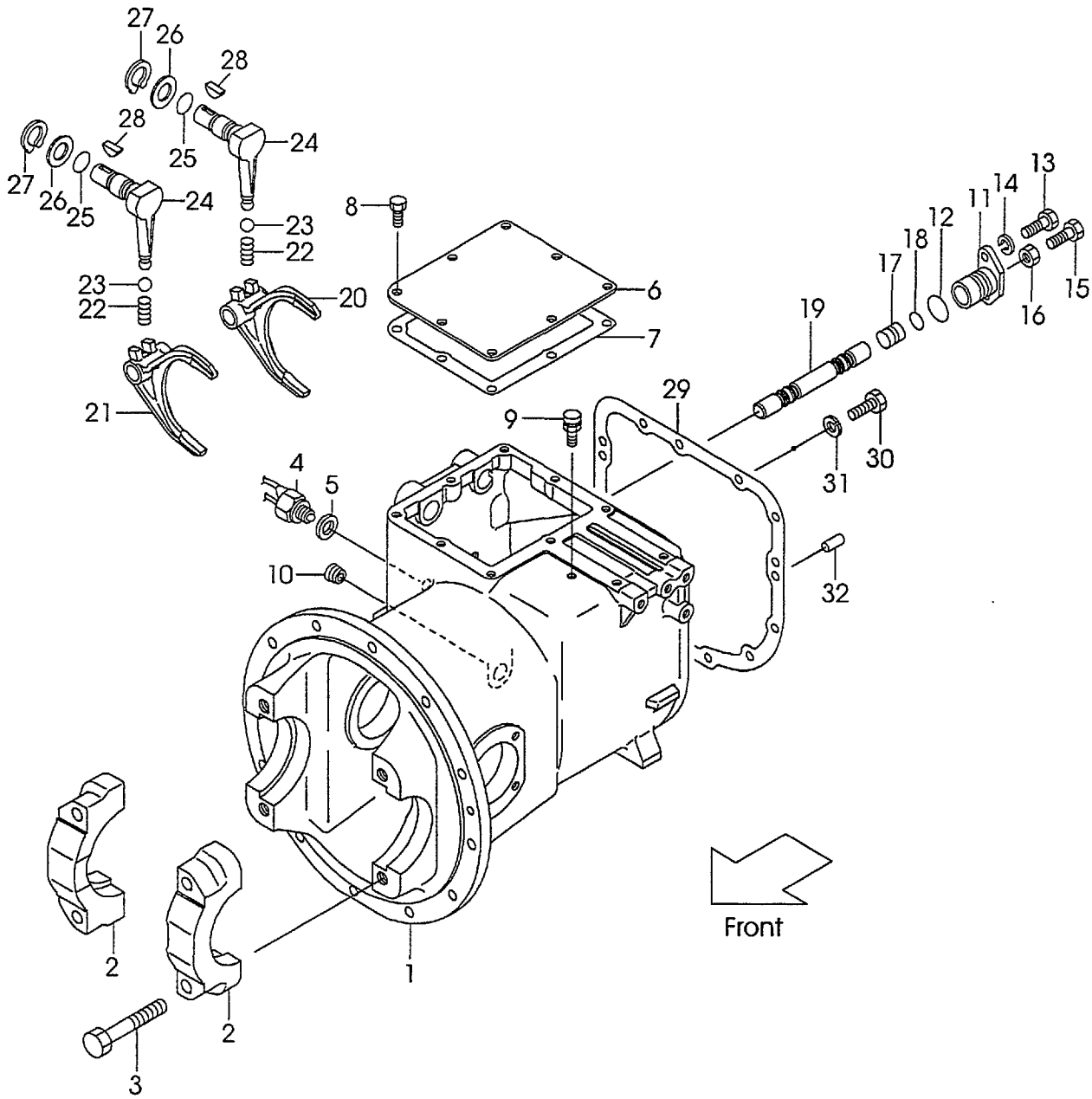

A:FG30C6 C:FD30C6
B:FG30T6 D:FD30T6

Fig.20
(F5032530)

Item No	Part No.	Mark	Description	Req'd	Remarks : Serial No.
A1	134A3-40201		CASE-ASSY,T/M	1	A,C
					INC.1,2
1	134A3-42001		CASE	1	A,C
2	134A3-42011		CAP,BEARING	2	A,C
3	134A3-42221		BOLT	4	A,C
4	134A3-42221		SWITCH,LAMP	2	A,C
5	12003-42461		PACKING	2	A,C
6	134A3-42021		COVER	1	A,C
7	134A3-42031		GASKET	1	A,C
8	01184-10016		BOLT	8	A,C
9	15573-42151		BREATHER	1	A,C
10	12163-82541		PLUG	1	A,C
11	12003-42052		SUPPORTER	1	A,C
12	03310-00300		O-RING	1	A,C
13	01103-08020		BOLT	2	A,C
14	02011-00008		WASHER	2	A,C
15	01123-10045		BOLT	1	A,C
16	01400-00010		NUT	1	A,C
17	12003-42061		SPACER	1	A,C
18	03300-00160		O-RING	1	A,C
19	134A3-42401		ROD	1	A,C
20	134A3-42411		FORK,SHIFT F-R	1	A,C
21	134A3-42421		FORK,SHIFT H-L	1	A,C
22	12003-42421		SPRING	2	A,C
23	03190-00013		BALL	2	A,C
24	134A3-42431		LEVER	2	A,C
25	134A3-42451		O-RING	2	A,C
26	02000-00022		WASHER	2	A,C
27	02100-00022		RING,SNAP	2	A,C
28	02360-05019		KEY	2	A,C
29	134A3-12051		GASKET	1	A,C
30	01103-10030		BOLT	12	A,C
31	02011-00010		WASHER	12	A,C
32	02212-12020		PIN	2	A,C

Fig.21 MISSION GEAR(C-TYPE)

(F5032540)

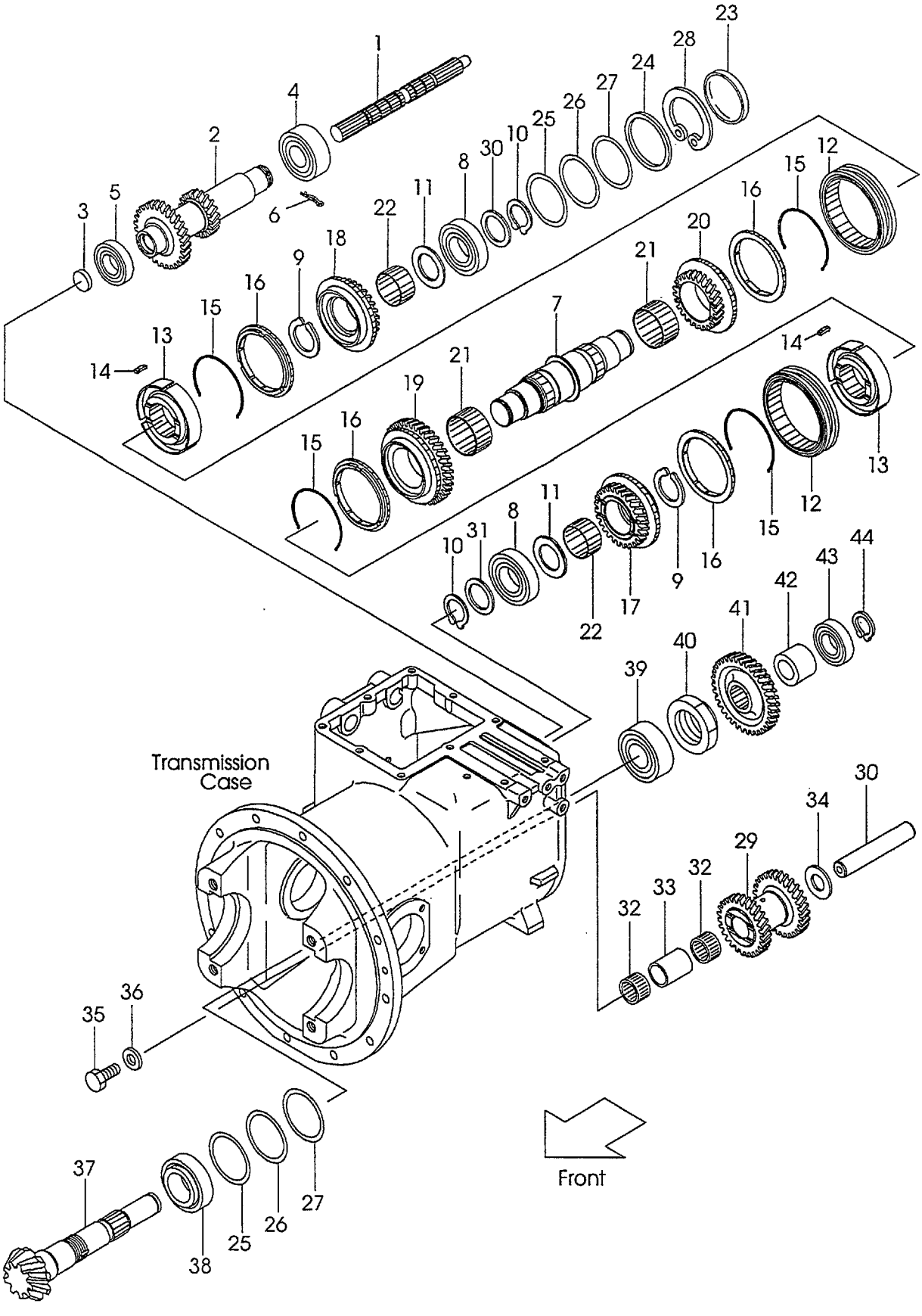

A:FG30C6 C:FD30C6
B:FG30T6 D:FD30T6

Fig.21
(F5032540)

Item No	Part No.	Mark	Description	Req'd	Remarks : Serial No.
1	134A3-42051		SHAFT,MAIN DRIVE	1	A,C
2	136F3-42001		SHAFT,INPUT	1	A,C
3	134A3-42071		CAP	1	A,C
4	03000-06207		BEARING	1	A,C
5	03000-06208		BEARING	1	A,C
6	134A3-42081		PIN	1	A,C
A1	136F3-40201		SHAFT-ASSY,MAIN	1	A,C
					INC.7-22
7	134A3-42101		SHAFT,MAIN	1	A,C
8	134A3-42211		BEARING	2	A,C
9	02120-00050		RING,SNAP	2	A,C
10	02100-00040		RING,SNAP	2	A,C
11	124T3-43001		PLATE	2	A,C
A2	134A3-40221		SYNCHRONIZER-ASSY	2	A,C
					INC.12-15
12	134A3-42111		SLEEVE	2	A,C
13	134A3-42121		HUB	2	A,C
14	15573-42011		INSERT	6	A,C
15	134A3-42131		SPRING	4	A,C
16	134A3-42141		RING	4	A,C
17	139A3-42011		GEAR,HIGH	1	A,C
18	134A3-42151		GEAR,HIGH&FORWAD	1	A,C
19	131A3-42021		GEAR,LOW SPEED	1	A,C
20	134A3-42171		GEAR,REVERSE	1	A,C
21	134A3-42181		BEARING	2	A,C
22	134A3-42191		BEARING	2	A,C
23	134A3-42201		CAP	1	A,C
24	10113-40171		WASHER	1	A,C
25	12003-42311		SHIM T-0.5	1	A,C
26	12003-42321		SHIM T-0.2	2	A,C
27	12003-42331		SHIM T-0.1	1	A,C
28	02121-00080		RING,SNAP	1	A,C
29	134A3-42251		GEAR,COUNTER	1	A,C
30	134A3-42261		SHAFT,COUNTER GEAR	1	A,C
31	15913-42511		SPACER	2	A,C
32	12003-42281		BEARING	2	A,C
33	12003-42291		SPACER	1	A,C
34	134A3-42271		PLATE	2	A,C
35	01103-10020		BOLT	1	A,C
36	02000-00010		WASHER	1	A,C
37	134A3-42301		SHAFT,OUTPUT	1	A,C
38	115G3-82641		BEARING	1	A,C
39	12003-43031		BEARING	1	A,C
40	115G3-82471		NUT	1	A,C
41	134A3-42321		GEAR,OUTPUT	1	A,C
42	134A3-42331		SPACER	1	A,C
43	03000-06306		BEARING	1	A,C
44	02100-00030		RING,SNAP	1	A,C

Fig.22 DRIVE UNIT MOUNT(T-TYPE)

(F50325A0)

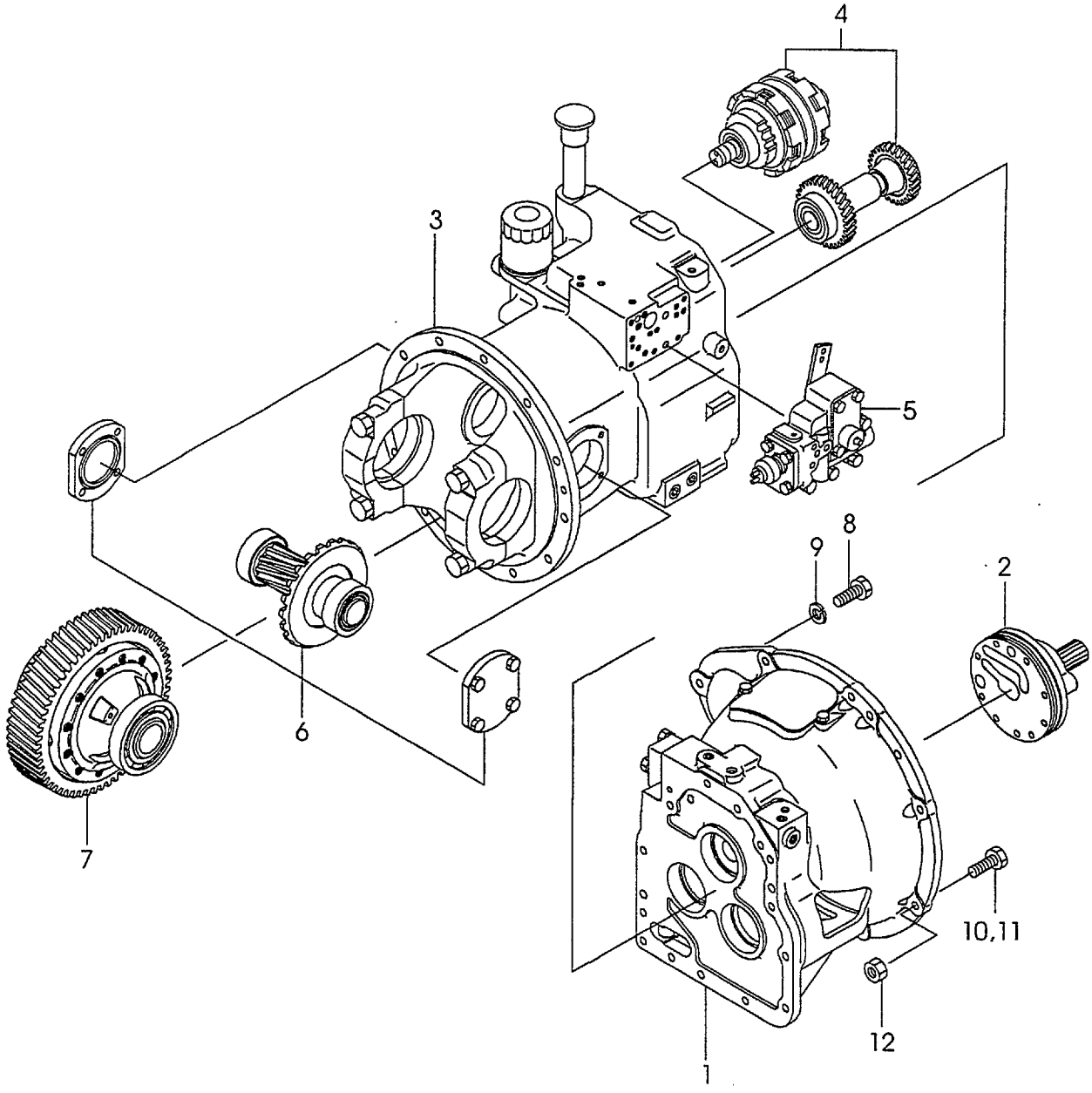

A:FG30C6 C:FD30C6
B:FG30T6 D:FD30T6

Fig.22
(F50325A0)

Item No	Part No.	Mark	Description	Req'd	Remarks : Serial No.
A1	137B2-50001		UNIT-ASSY,DRIVE	1	B (37B-25)INC.1-7
-	534G8-30101		UNIT-ASSY,DRIVE	1	D (34G-25)INC.1-7
1	NO PART NO.		CASE,T/C	1	B SEE FIG.23
-	NO PART NO.		CASE,T/C	1	D SEE FIG.23
2	NO PART NO.		PUMP,CHARGING	1	B,D SEE FIG.24
3	NO PART NO.		CASE,T/M	1	B,D SEE FIG.25
4	NO PART NO.		PACK,CLUTCH	1	B,D SEE FIG.26
5	NO PART NO.		VALVE,CONTROL	1	B,D SEE FIG.27
6	NO PART NO.		REDUCTION	1	B,D SEE FIG.28
7	NO PART NO.		DIFFERENTIAL	1	B,D SEE FIG.29
8	01103-10016		BOLT	8	B
-	01103-08020		BOLT	12	D
9	02011-00010		WASHER	8	B
-	02011-00008		WASHER	12	D
10	01184-10050		BOLT	6	B
-	01184-10050		BOLT	1	D
11	01184-10035		BOLT	2	B
-	01184-10030		BOLT	7	D
12	01400-00010		NUT	2	B
-	01400-00010		NUT	1	D

Fig.23 TORQUE CONVERTER CASE (T-TYPE)

(F50325B0)

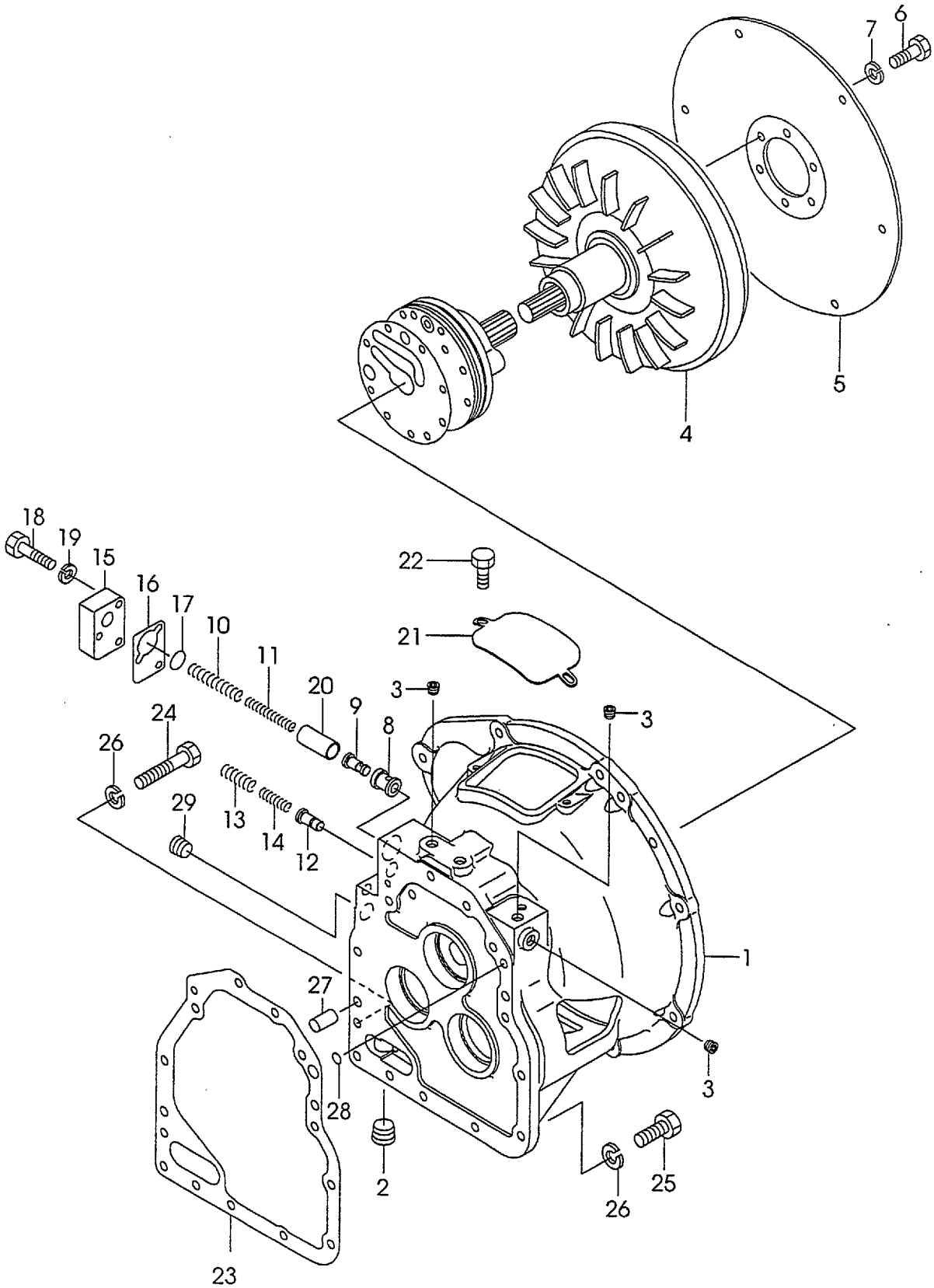

Fig.23
(F50325B0)

A:FG30C6 C:FD30C6
B:FG30T6 D:FD30T6

Item No	Part No.	Mark	Description	Req'd	Remarks : Serial No.
1	134B3-82001		CASE,T/C	1	B,D
2	27397-52101		PLUG	1	B,D
3	116H3-82101		PLUG	4	B,D
4	137B3-80201		TORQUE-CONVERTOR	1	B
-	134G3-80301		TORQUE-CONVERTOR	1	D
5	137B3-80211		PLATE,INPUT	1	B
-	13683-82022		PLATE,INPUT	1	D
6	12163-82621		BOLT	6	B,D
7	02003-20010		WASHER	6	B,D
8	134B3-82281		SLEEVE	1	B,D
9	134B3-82301		PISTON	1	B,D
10	134B3-82021		SPRING	1	B,D
11	134B3-82031		SPRING	1	B,D
12	134B3-82011		PISTON	1	B,D
13	134B3-82311		SPRING	1	B,D
14	134B3-82321		SPRING	1	B,D
15	134B3-82041		COVER	1	B,D
16	134B3-82051		GASKET	1	B,D
17	15583-82541		O-RING	1	B,D
18	01103-08040		BOLT	3	B,D
19	02011-00008		WASHER	3	B,D
20	134B3-82291		COLLAR	1	B,D
21	131M2-52001		COVER	1	B,D
22	01185-08020		BOLT & WASHER	2	B,D
23	134B3-82101		GASKET	1	B,D
24	01103-10065		BOLT	10	B,D
25	01103-10030		BOLT	3	B,D
26	02011-00010		WASHER	13	B,D
27	02212-12020		PIN	2	B,D
28	15583-82521		O-RING	1	B,D
29	12163-82541		PLUG	1	B,D

Fig.24 CHARGING PUMP (T-TYPE)
(F50325C0)

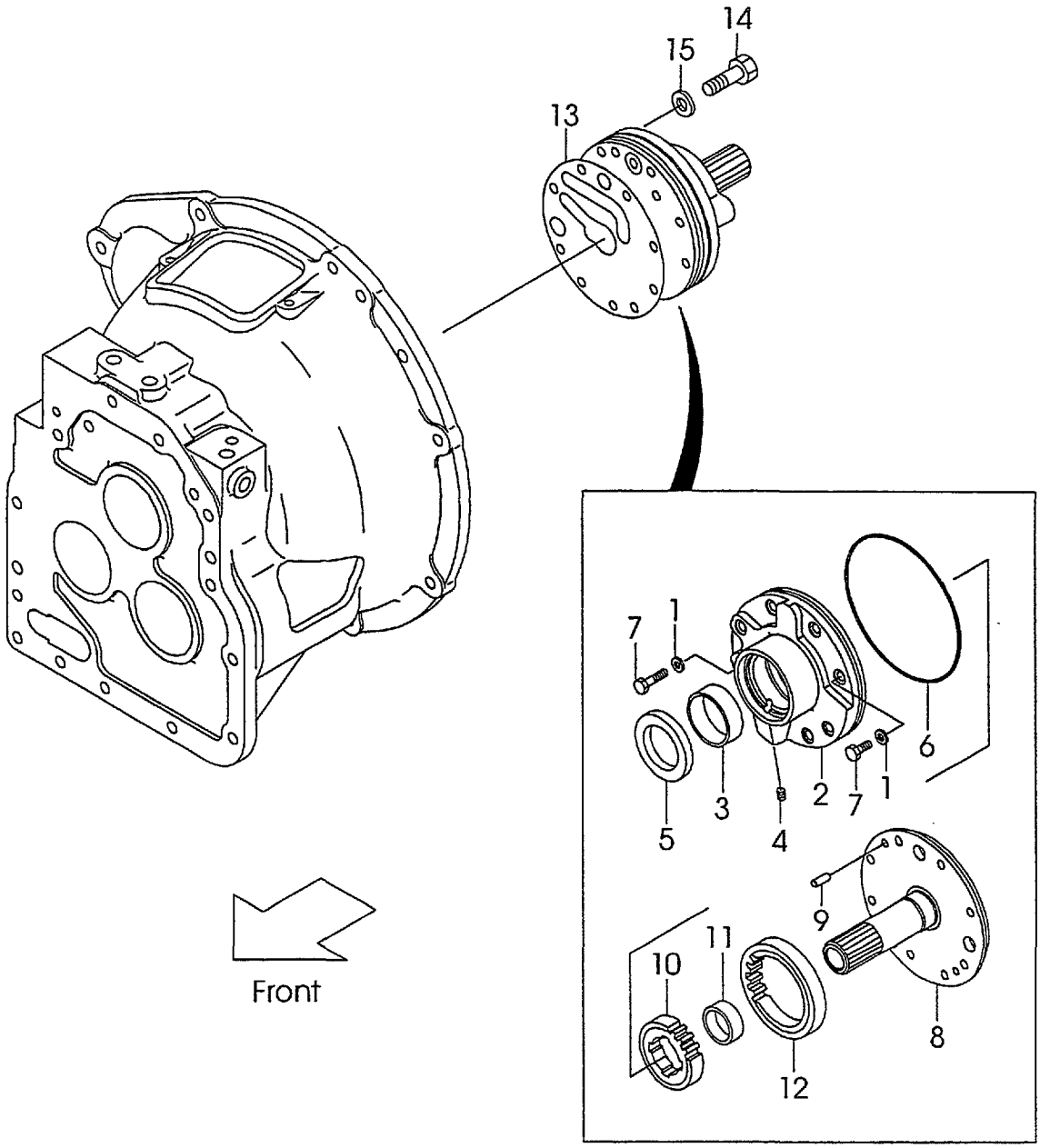

Fig.24
(F50325C0)

A:FG30C6 C:FD30C6
B:FG30T6 D:FD30T6

Item No	Part No.	Mark	Description	Req'd	Remarks : Serial No.
A1	134G3-80401		PUMP-ASSY,CHARGING	1	B,D
					INC.1-12
1	12163-82561		PACKING	2	B,D
2	15583-82151	*	CASE	1	B,D
3	15583-82161	*	BUSHING	1	B,D
4	23870-52821	*	PLUG	1	B,D
5	15583-82172		SEAL,OIL	1	B,D
6	15583-82181		O-RING	1	B,D
7	01103-08035		BOLT	2	B,D
8	134G3-82001		SUPPORT	1	B,D
9	02212-06016		PIN,STRAIGHT	2	B,D
A2	15583-82221		GEAR,DRIVE	1	B,D
					INC.10,11
10	15583-82231	*	GEAR,DRIVE	1	B,D
11	15583-82241	*	BUSHING	1	B,D
12	15583-82251	*	GEAR,DRIVEN	1	B,D
13	134B3-82091		GASKET	1	B,D
14	01103-08045		BOLT	6	B,D
15	12163-82561		PACKING	6	B,D
K1	15583-82141		KIT,CASE	1	B,D
					INC.2-4
K2	15583-82211		KIT,GEAR	1	B,D
					INC.10-12

Fig.25 MISSION CASE (T-TYPE)

(F50325D0)

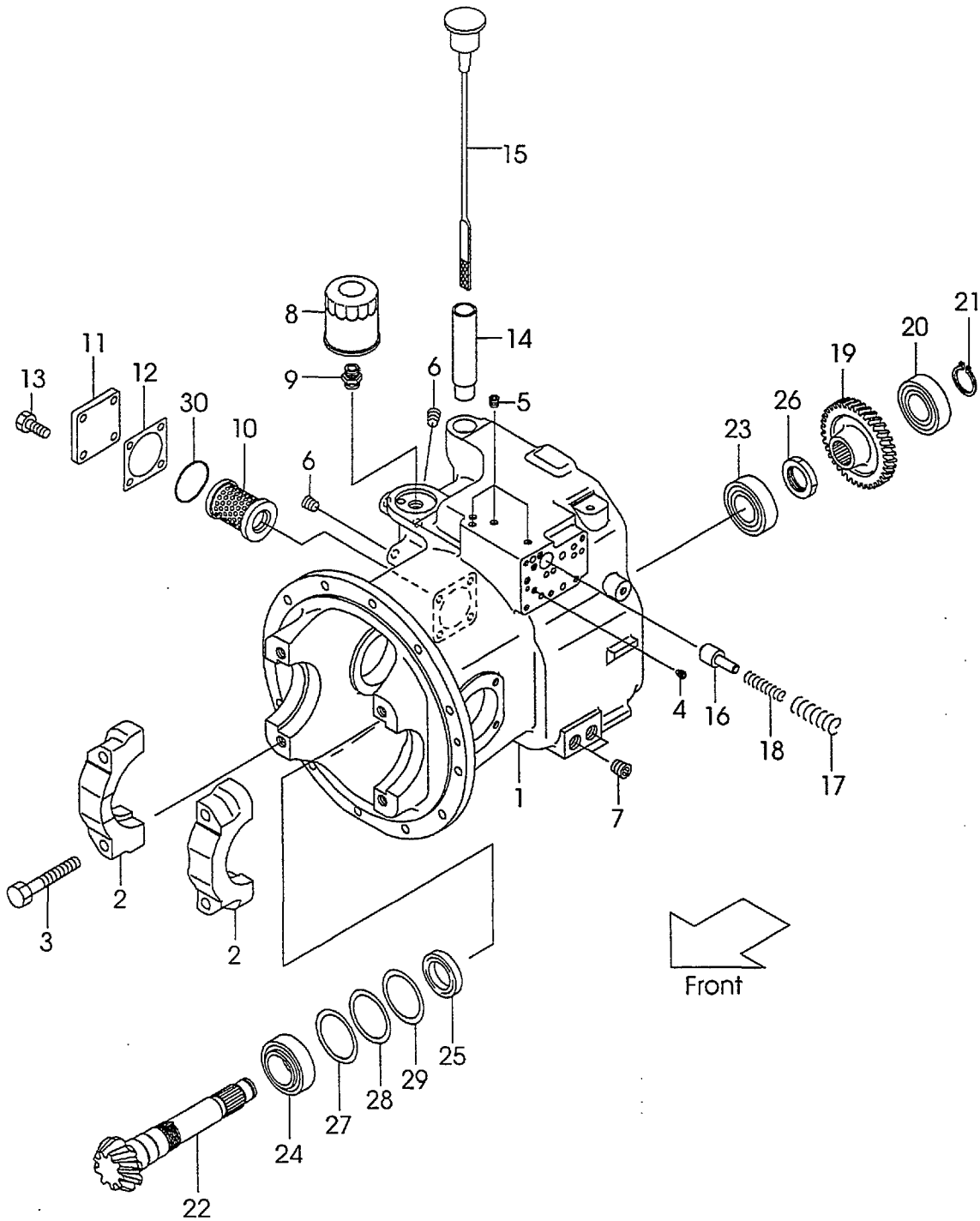

A:FG30C6 C:FD30C6
B:FG30T6 D:FD30T6

Fig.25
(F50325D0)

Item No	Part No.	Mark	Description	Req'd	Remarks : Serial No.
A1	134B3-80281		CASE-ASSY,T/M	1	B,D
					INC.1,2
1	134B3-82111		CASE,T/M	1	B,D
2	134A3-42011		CAP,BRG	2	B,D
3	134A3-42221		BOLT	4	B,D
4	115G3-82671		PLUG	1	B,D
5	116H3-82201		PLUG	4	B,D
6	116H3-82101		PLUG	2	B,D
7	12163-82541		PLUG	2	B,D
8	115G3-82241		FILTER,OIL	1	B,D
9	115G3-82251		NIPPLE	1	B,D
10	124U3-82521		STRAINER	1	B,D
11	124U3-82081		COVER	1	B,D
12	124U3-82091		GASKET	1	B,D
13	01184-10025		BOLT & WASHER	4	B,D
14	12163-82221		PIPE	1	B,D
15	12163-82232		CAP	1	B,D
16	15583-82441		SPOOL	1	B,D
17	15583-82451		SPRING	1	B,D
18	15583-82461		SPRING	1	B,D
19	115G3-82451		GEAR	1	B,D
20	03000-06306		BRG,BALL	1	B,D
21	02100-00030		RING,SNAP	1	B,D
22	134B3-82141		SHAFT,OUTPUT	1	B,D
23	12003-43031		BRG,TAPER-ROLLER	1	B,D
24	115G3-82641		BRG,TAPER-ROLLER	1	B,D
25	115G3-82651		SEAL,OIL	1	B,D
26	115G3-82471		NUT	1	B,D
27	12003-42311		SHIM	1	B,D
28	12003-42321		SHIM	2	B,D
29	12003-42331		SHIM	1	B,D
30	115G3-82111		O-RING	1	B,D

Fig.26 CLUTCH PACK (T-TYPE)
(F50325E0)

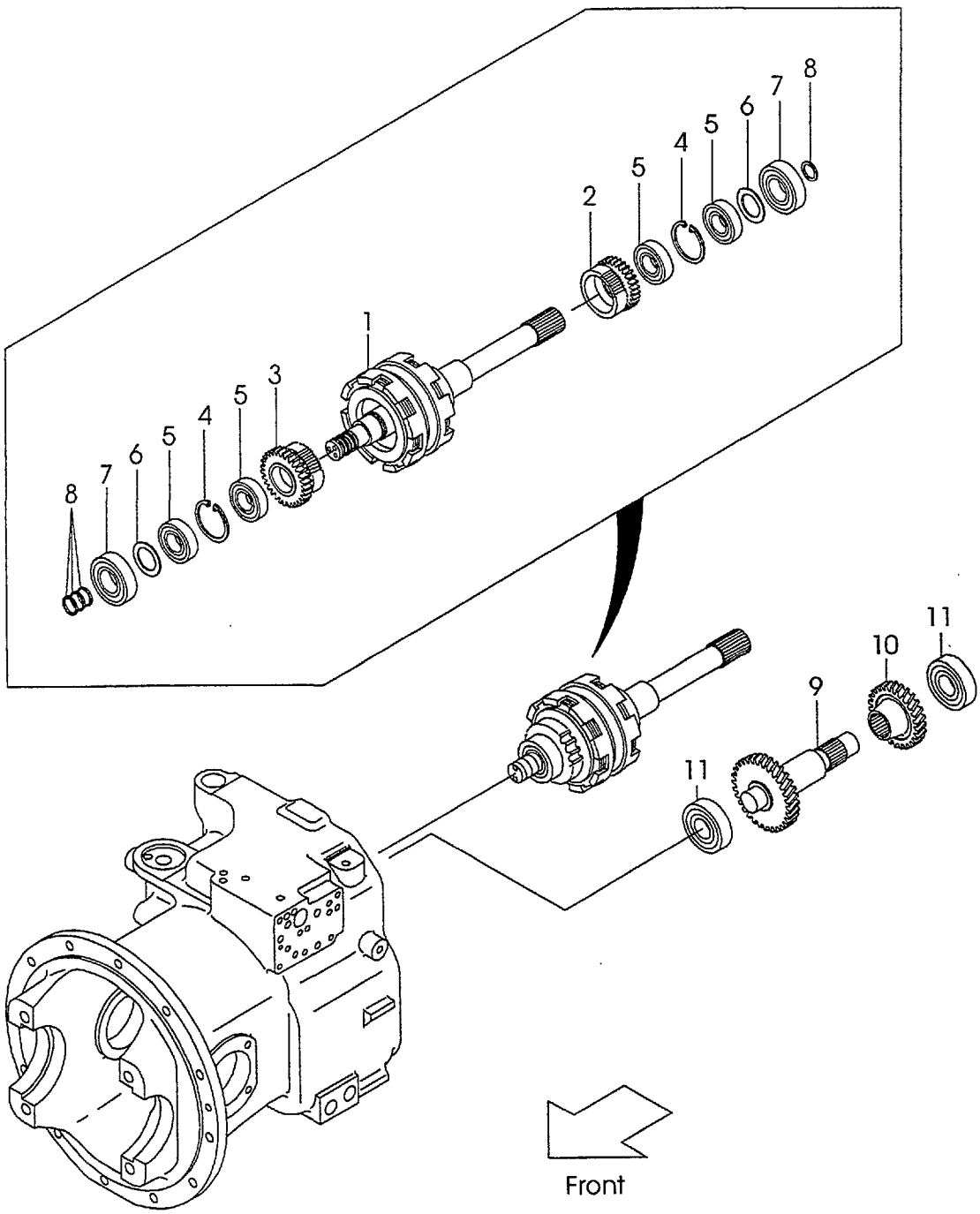

Fig.26
(F50325E0)

A:FG30C6 C:FD30C6
B:FG30T6 D:FD30T6

Item No	Part No.	Mark	Description	Req'd	Remarks : Serial No.
A1	134G3-80201		CLUTCH,HYDRAULIC	1	B,D
					INC.1-8
1	134G3-80251		SHAFT,INPUT	1	B,D
2	115G3-82331		GEAR,FORWARD	1	B,D
3	115G3-82341		GEAR	1	B,D
4	02121-00058		RING,SNAP	2	B,D
5	115G3-82351		BEARING	4	B,D
6	115G3-82361		PLATE	2	B,D
7	03000-06306		BEARING	2	B,D
8	11243-82161		RING,SEAL	4	B,D
9	115G3-82401		SHAFT	1	B,D
10	115G3-82411		GEAR	1	B,D
11	03000-06306		BEARING	2	B,D

Fig.27 CONTROL VALVE (T-TYPE)

(F50325F0)

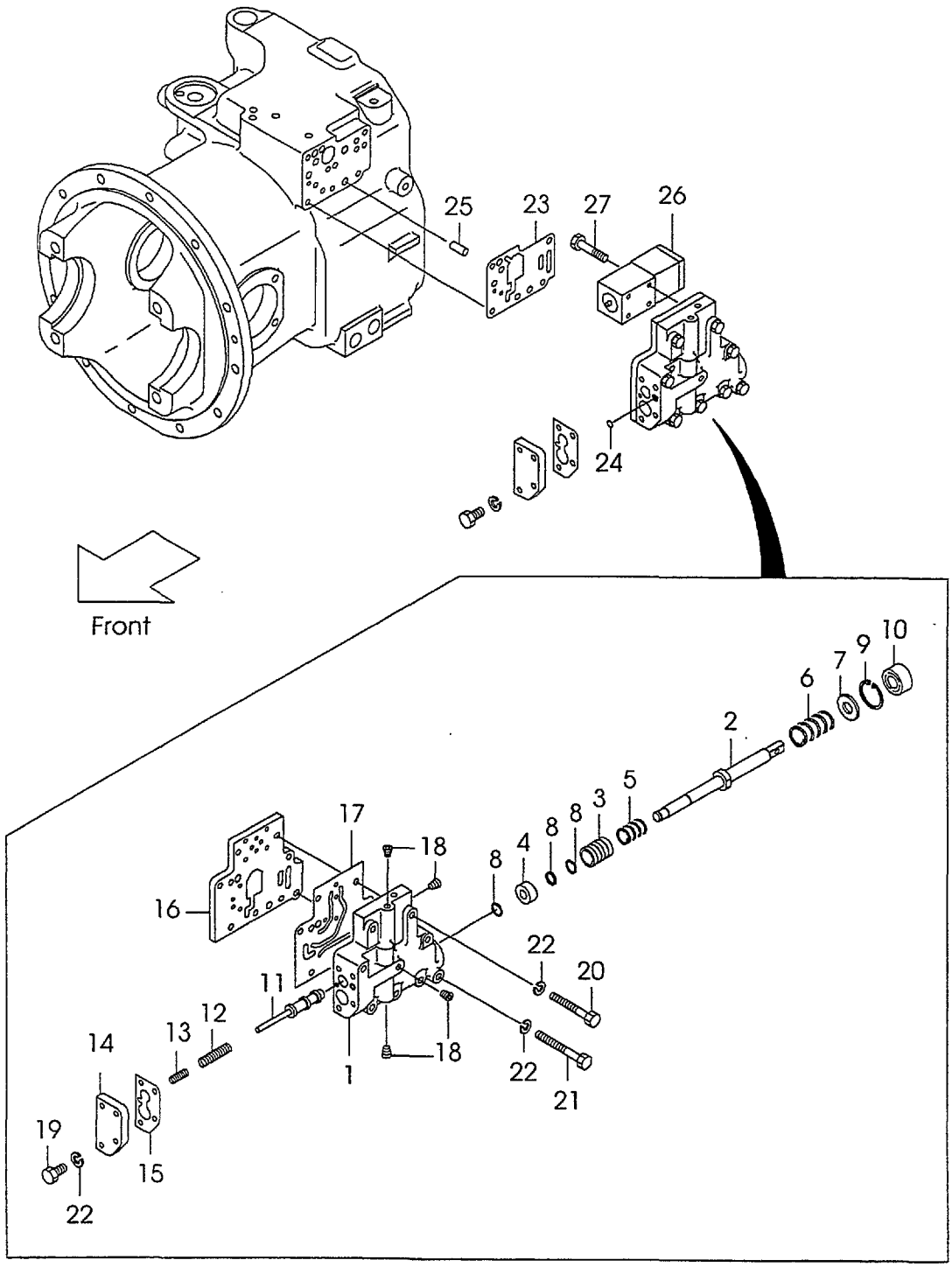

A:FG30C6 C:FD30C6
B:FG30T6 D:FD30T6

Item No	Part No.	Mark	Description	Req'd	Remarks : Serial No.
A1	534B8-30201		VALVE-ASSY,CONTROL	1	B,D
					INC.1-22
1	534B8-32001		BODY	1	B,D
2	115G3-82512		SPOOL	1	B,D
3	15793-82321		PLUNGER	1	B,D
4	115G3-82522		PISTON	1	B,D
5	15793-82341		SPRING	1	B,D
6	115G3-82491		SPRING	1	B,D
7	15943-82651		SPACER	1	B,D
8	02100-00012		SNAP RING	3	B,D
9	02110-00030		SNAP RING	1	B,D
10	15943-82661		SEAL,OIL	1	B,D
11	15943-82731		SPOOL	1	B,D
12	15943-82741		SPRING	1	B,D
13	15943-82751		SPRING	1	B,D
14	534B8-32011		PLATE	1	B,D
15	534B8-32021		GASKET	1	B,D
16	534B8-32021		PLATE	1	B,D
17	534B8-32041		GASKET	1	B,D
18	116H3-82201		PLUG	4	B,D
19	01103-08025		BOLT	4	B,D
20	01103-08045		BOLT	2	B,D
21	01103-08060		BOLT	7	B,D
22	02011-00008		WASHER	13	B,D
23	534B8-32051		GASKET	1	B,D
24	15583-82571		O-RING	1	B,D
25	02212-10025		PIN	2	B,D
26	135L3-82001		VALVE,SOLENOID	1	B,D
27	01170-05045		BOLT	4	B,D

Fig.28 REDUCTION(C-TYPE)(T-TYPE)

(F50325G0)

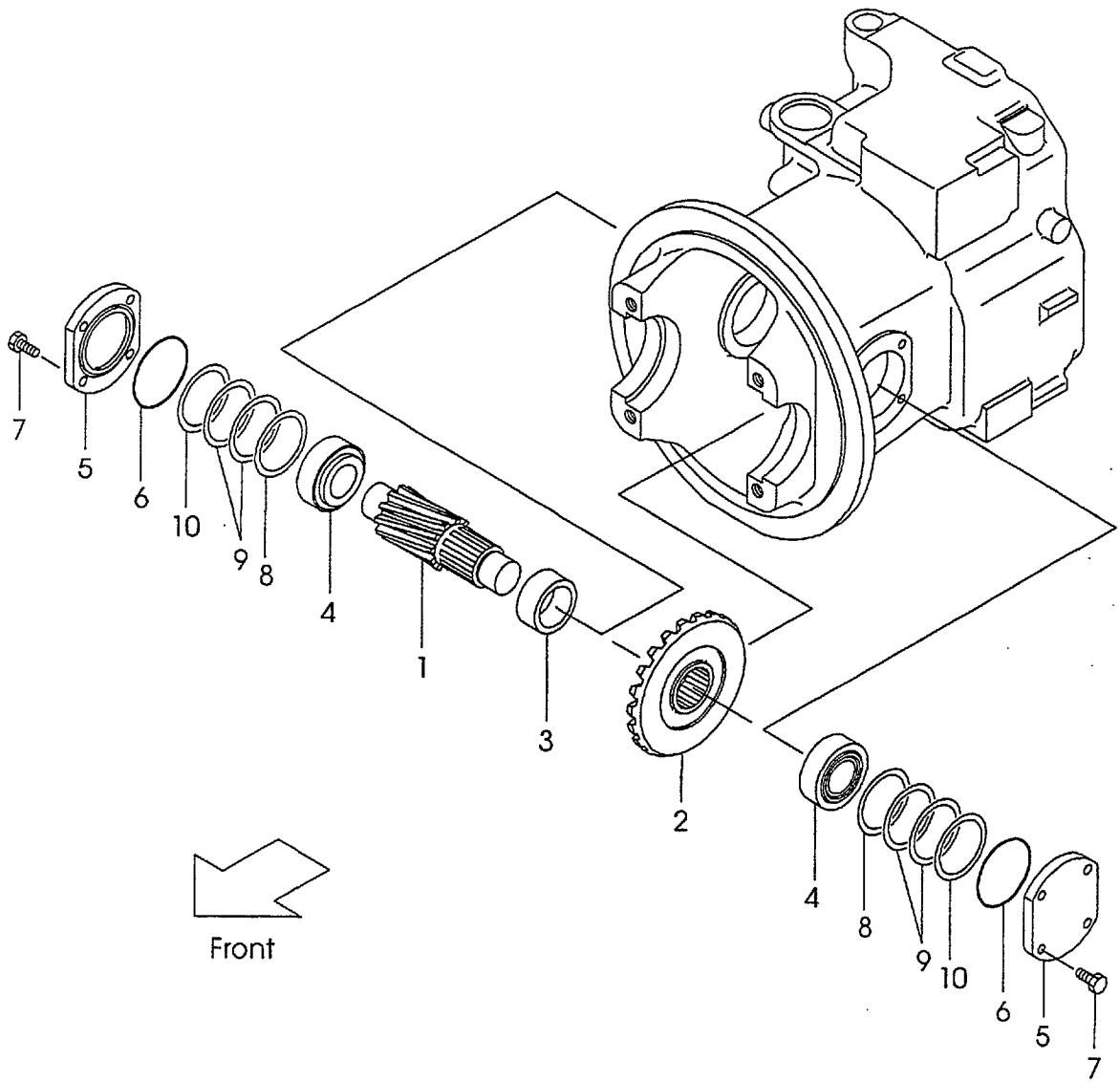

A:FG30C6 C:FD30C6
B:FG30T6 D:FD30T6

Fig.28
(F50325G0)

Item No	Part No.	Mark	Description	Req'd	Remarks : Serial No.
1	134A3-22001		SHAFT,FINAL PINION	1	
2	134A3-22011		RING,SPIRAL BEVEL	1	
3	134A3-22021		SPACER	1	
4	134A3-22031		BEARING	2	
5	134A3-22041		COVER	2	
6	03310-00800		O-RING	2	
7	01184-10025		BOLT	8	
8	12003-42311		SHIM T-0.5	2	
9	12003-42321		SHIM T-0.2	4	
10	12003-42331		SHIM T-0.1	2	

Fig.29 DIFFERENTIAL(C-TYPE)(T-TYPE)
(F50325H0)

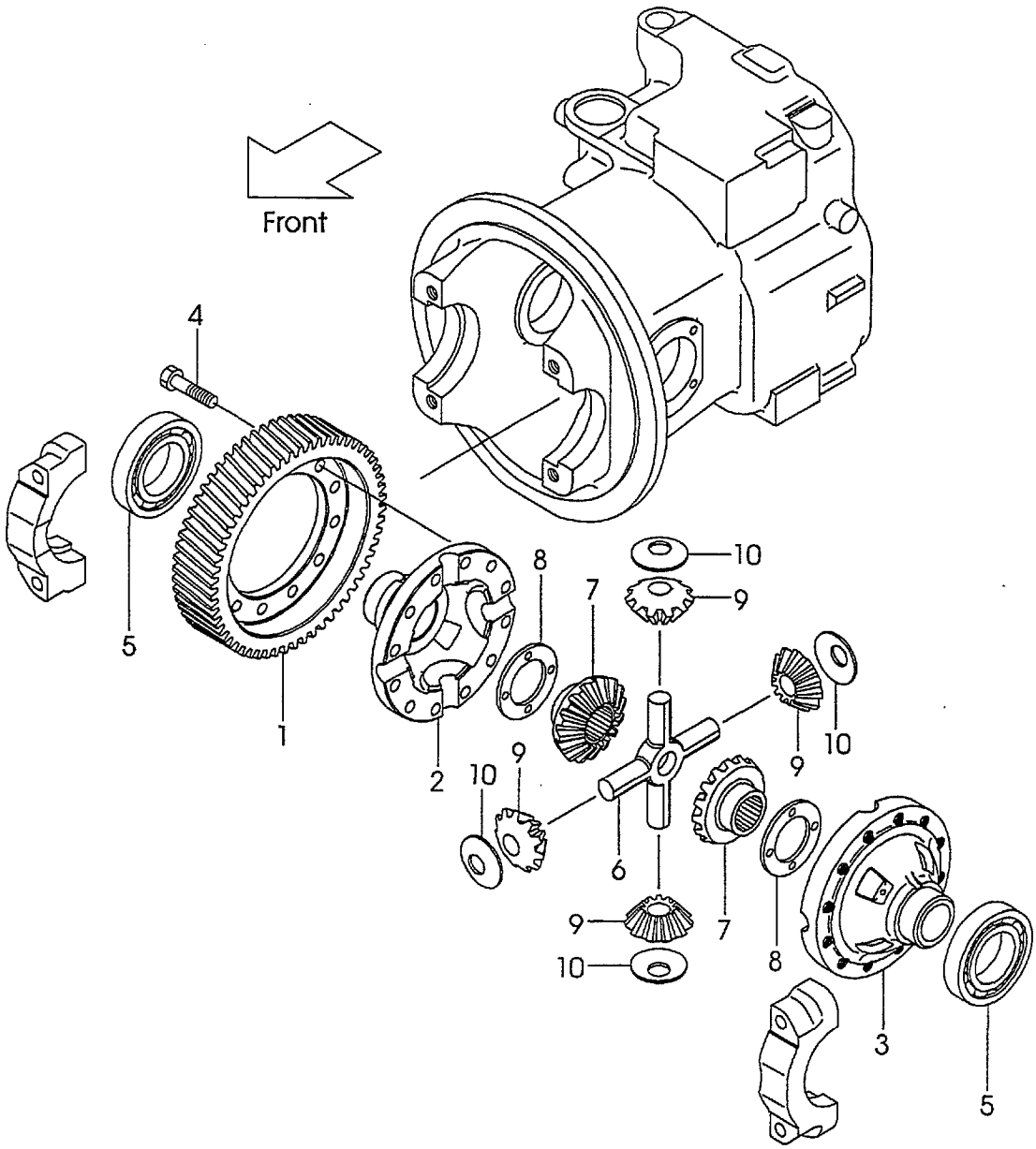

Fig.29
(F50325H0)

A:FG30C6 C:FD30C6
B:FG30T6 D:FD30T6

Item No	Part No.	Mark	Description	Req'd	Remarks : Serial No.
1	134A3-52001		GEAR,RING	1	
2	134A3-52011	*	CASE,CROSS RH.	1	
3	134A3-52021	*	CASE,CROSS LH.	1	
4	134A3-52061		BOLT	12	
5	03000-06213		BEARING	2	
6	124G3-52011		SPIDER	1	
7	134A3-52041		GEAR,SIDE	2	
8	16113-52141		WASHER,THRUST	(2)	
-	14453-52071		WASHER,THRUST	(2)	
9	134A3-52051		GEAR,PINION	4	
10	16113-52121		WASHER	4	
S1	134A3-59801		SET,CROSS-CASE	1	INC.2,3

Fig.30 DRIVE AXLE

(F5033010)

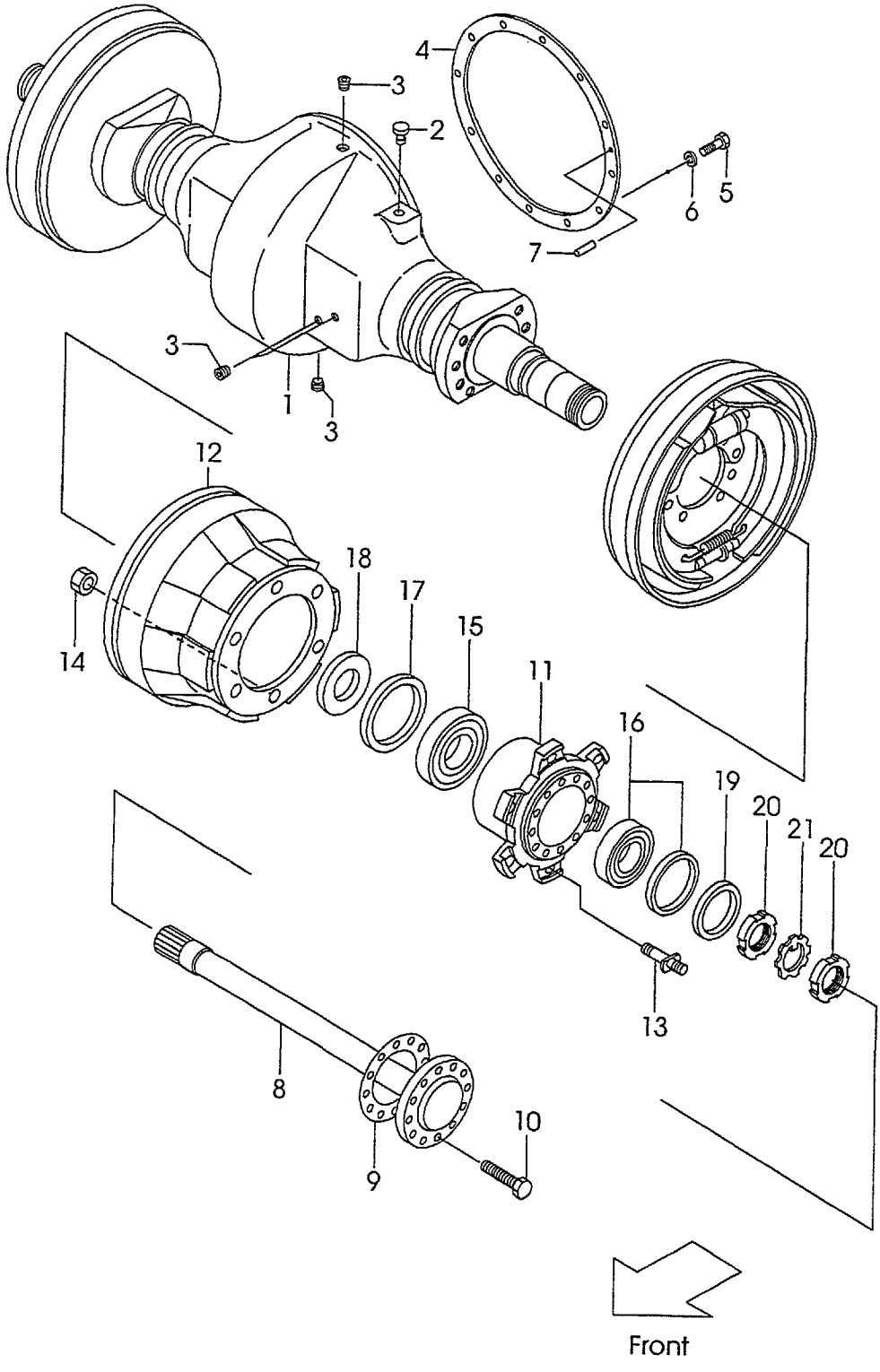

A:FG30C6 C:FD30C6
B:FG30T6 D:FD30T6

Fig.30
(F5033010)

Item No	Part No.	Mark	Description	Req'd	Remarks : Serial No.
1	214J3-00302		HOUSING	1	
2	15573-42151		BREATHER	1	
3	22193-03001		PLUG	4	
4	24452-52002		PACKING	1	
5	01106-12040		BOLT	12	
6	02011-00012		WASHER	12	
7	02212-10020		PIN	1	
8	214J3-02011		SHAFT,DRIVE	2	
9	24453-02102		PACKING	2	
10	24453-02061		BOLT	24	
A1	24453-00301		HUB & DRUM ASSY	2	INC.11-17
11	NO PART NO.	#	HUB	2	
12	24453-02131		DRUM	2	
13	25303-02102		BOLT,HUB	12	
14	01400-10020		NUT	12	
15	03071-30214		BRG,TAPER-ROLLER	2	
16	23453-02071		BRG,TAPER-ROLLER	2	
17	23653-02001		SEAL,OIL	2	
18	234G3-02001		RETAINER	2	
19	23453-02091		WASHER	2	
20	03192-00012		NUT	4	
21	03192-10012		WASHER	2	

Fig.31 WHEEL BRAKE
(F5033710)

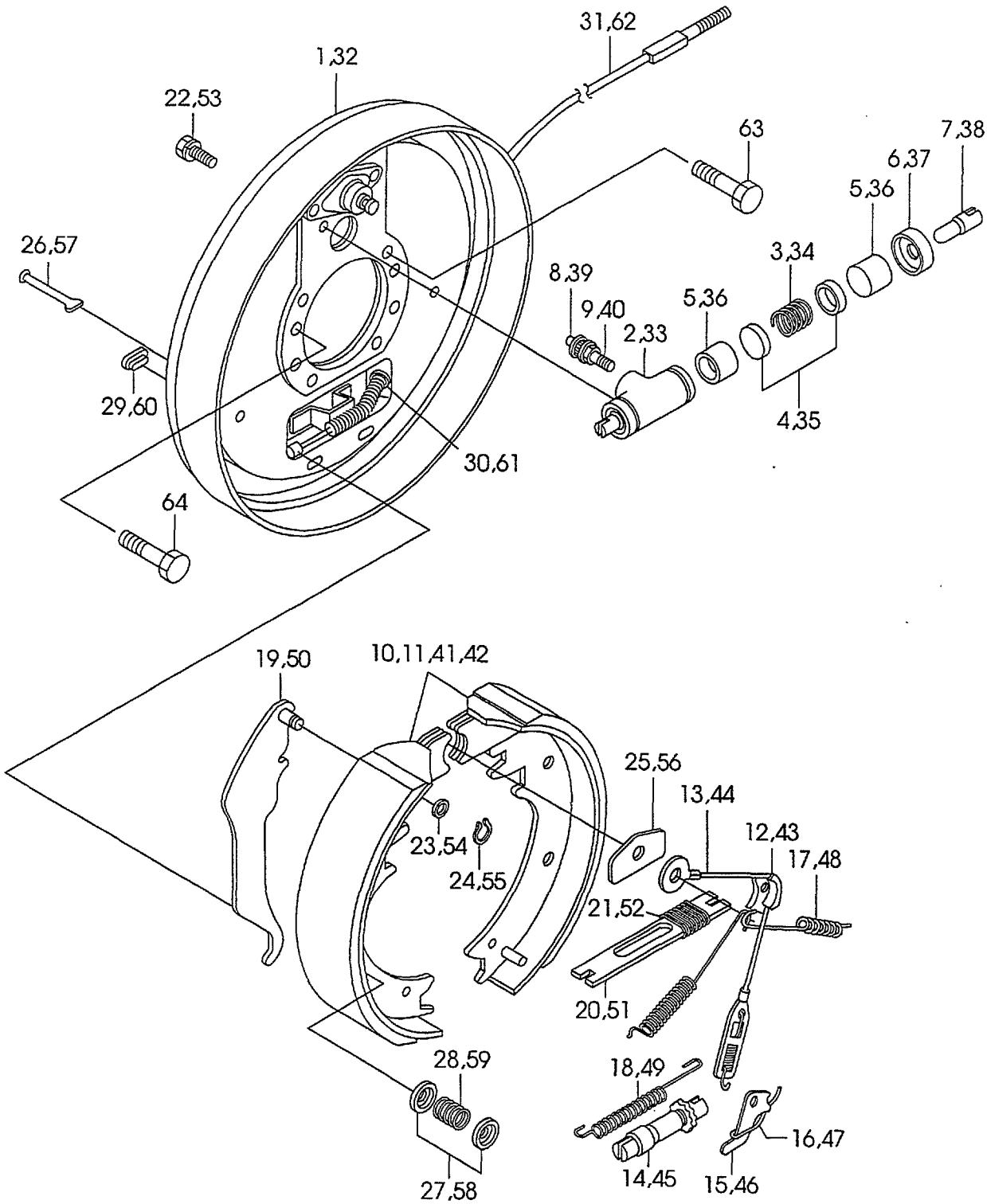

A:FG30C6 C:FD30C6
B:FG30T6 D:FD30T6

Fig.31
(F5033710)

Item No	Part No.	Mark	Description	Req'd	Remarks : Serial No.
A1	522Q2-60501		BRAKE-ASSY,RH	1	INC.1-29
1	C-52-11246-21000		PLATE-ASSY,RH	1	
A2	C-52-11246-52001		CYL-ASSY,WHEEL	1	INC.2-9
2	NO PART NO.	#	CYL	1	
3	NO PART NO.	#*	SPRING	1	
4	NO PART NO.	#*	CUP	2	
5	NO PART NO.	#*	PISTON	2	
6	NO PART NO.	#*	BOOTS	2	
7	C-52-11242-52380		LINK	2	
8	C-52-30780-02340		CAP,BLEEDER	1	
9	C-52-11239-52320		SCREW	1	
10	NO PART NO.	#	SHOE & LINING	1	
11	NO PART NO.	#	SHOE & LINING	1	
12	C-52-11003-05143		GUIDE	1	
13	C-52-11255-55090		SPRING & CABLE	1	
14	C-52-11242-23300		ADJUSTER-ASSY,RH	1	
15	C-52-11218-25151		LEVER,RH	1	
16	C-52-11218-25161		SPRING,RH	1	
17	C-52-11242-54011		SPRING,RH	2	
18	C-52-11246-54071		SPRING,RH	1	
19	C-52-11242-24500		LEVER,RH	1	
20	C-52-11242-24530		STRUT,RH	1	
21	C-52-11232-54540		SPRING	1	
22	C-90-0567-0822		BOLT	2	
23	C-52-10901-64550		WASHER	1	
24	C-52-10901-64560		RETAINER	1	
25	C-52-11239-51270		GUIDE	1	
26	C-52-51308-54160		PIN	2	
27	C-52-51302-53840		CUP	4	
28	C-52-11105-54110		SPRING	2	
29	C-52-11204-69010		COVER	2	
30	C-90-9200-0800		RETAINER	1	
31	C-OC-11246-24603		CABLE,RH	1	
A3	522Q2-60511		BRAKE-ASSY,LH	1	INC.32-60
32	C-52-11246-11000		PLATE-ASSY,LH	1	
A4	C-52-11246-52001		CYL-ASSY,WHEEL	1	INC.33-40
33	NO PART NO.	#	CYL	1	
34	NO PART NO.	#*	SPRING	1	
35	NO PART NO.	#*	CUP	2	
36	NO PART NO.	#*	PISTON	2	
37	NO PART NO.	#*	BOOTS	2	
38	C-52-11242-52380		LINK	2	
39	C-52-30780-02340		CAP,BLEEDER	1	
40	C-52-11239-52320		SCREW	1	
41	NO PART NO.	#	SHOE & LINING	1	
42	NO PART NO.	#	SHOE & LINING	1	
43	C-52-11003-05143		GUIDE	1	
44	C-52-11255-55090		SPRING & CABLE	1	
45	C-52-11242-13300		ADJUSTER-ASSY,LH	1	
46	C-52-11218-15151		LEVER,LH	1	

Fig.31 WHEEL BRAKE
(F5033710)

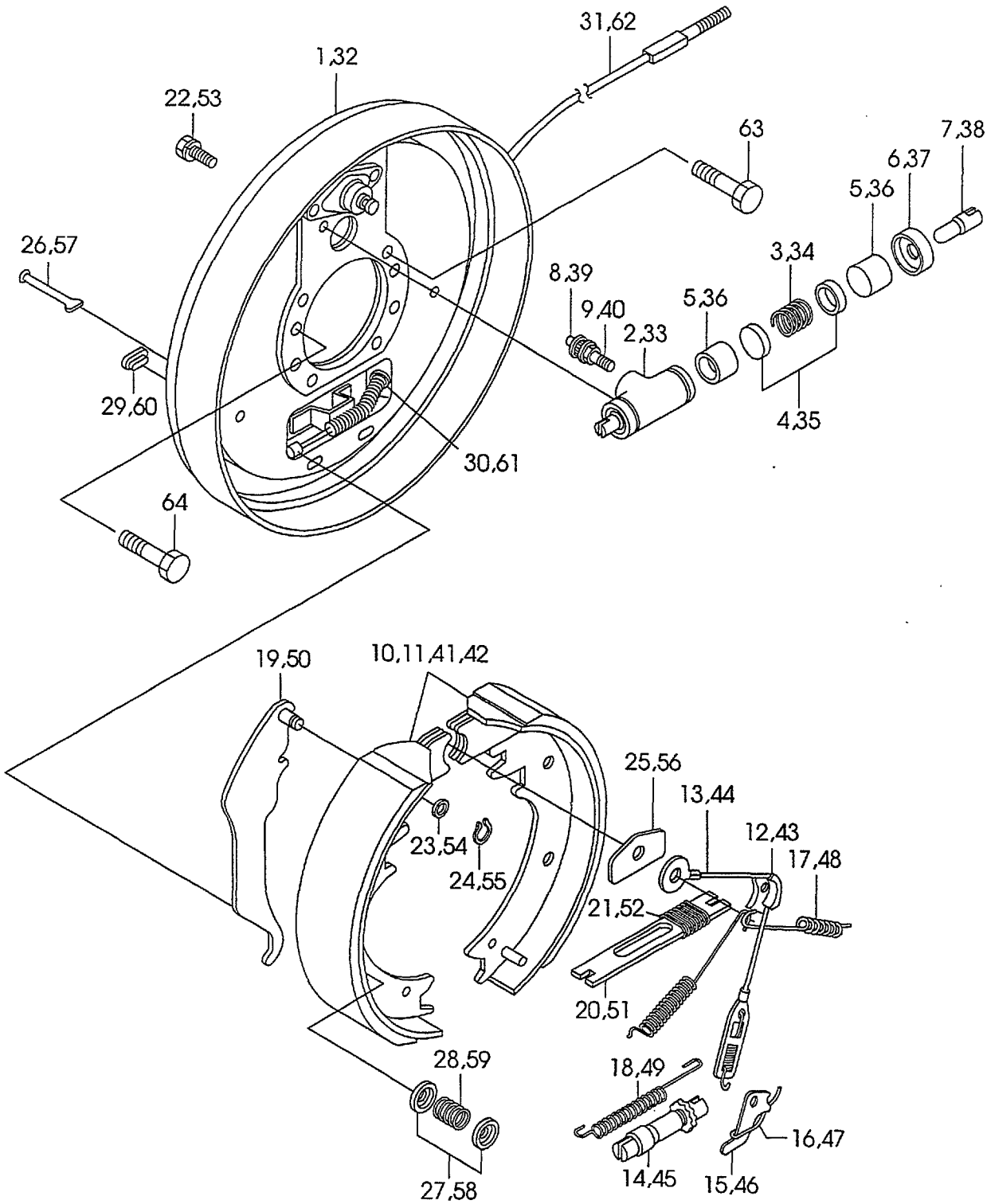

A:FG30C6 C:FD30C6
B:FG30T6 D:FD30T6

Item No	Part No.	Mark	Description	Req'd	Remarks : Serial No.
47	C-52-11218-15161		SPRING,LH	1	
48	C-52-11242-54010		SPRING,LH	2	
49	C-52-11246-54071		SPRING,LH	1	
50	C-52-11242-14500		LEVER,LH	1	
51	C-52-11242-14530		STRUT,LH	1	
52	C-52-11232-54540		SPRING	1	
53	C-90-0567-0822		BOLT	2	
54	C-52-10901-64550		WASHER	1	
55	C-52-10901-64560		RETAINER	1	
56	C-52-11239-51270		GUIDE	1	
57	C-52-51308-54160		PIN	2	
58	C-52-51302-53840		CUP	4	
59	C-52-11105-54110		SPRING	2	
60	C-52-11204-69010		COVER	2	
61	C-90-9200-0800		RETAINER	1	
62	C-OC-11246-14603		CABLE,LH	1	
63	25953-72001		BOLT	4	
64	214A3-02001		BOLT	12	
K1	C-K2-11242-52000		KIT,REPAIR RH	1	INC.3-6
K2	C-K2-11242-52000		KIT,REPAIR LH	1	INC.35-34
K3	C-K2-11246-83021		KIT,SHOE,RH	1	INC.10,11
K4	C-K2-11246-83011		KIT,SHOE,LH	1	INC.41,42

Fig.32 STEERING WHEEL UNIT

(F5034110)

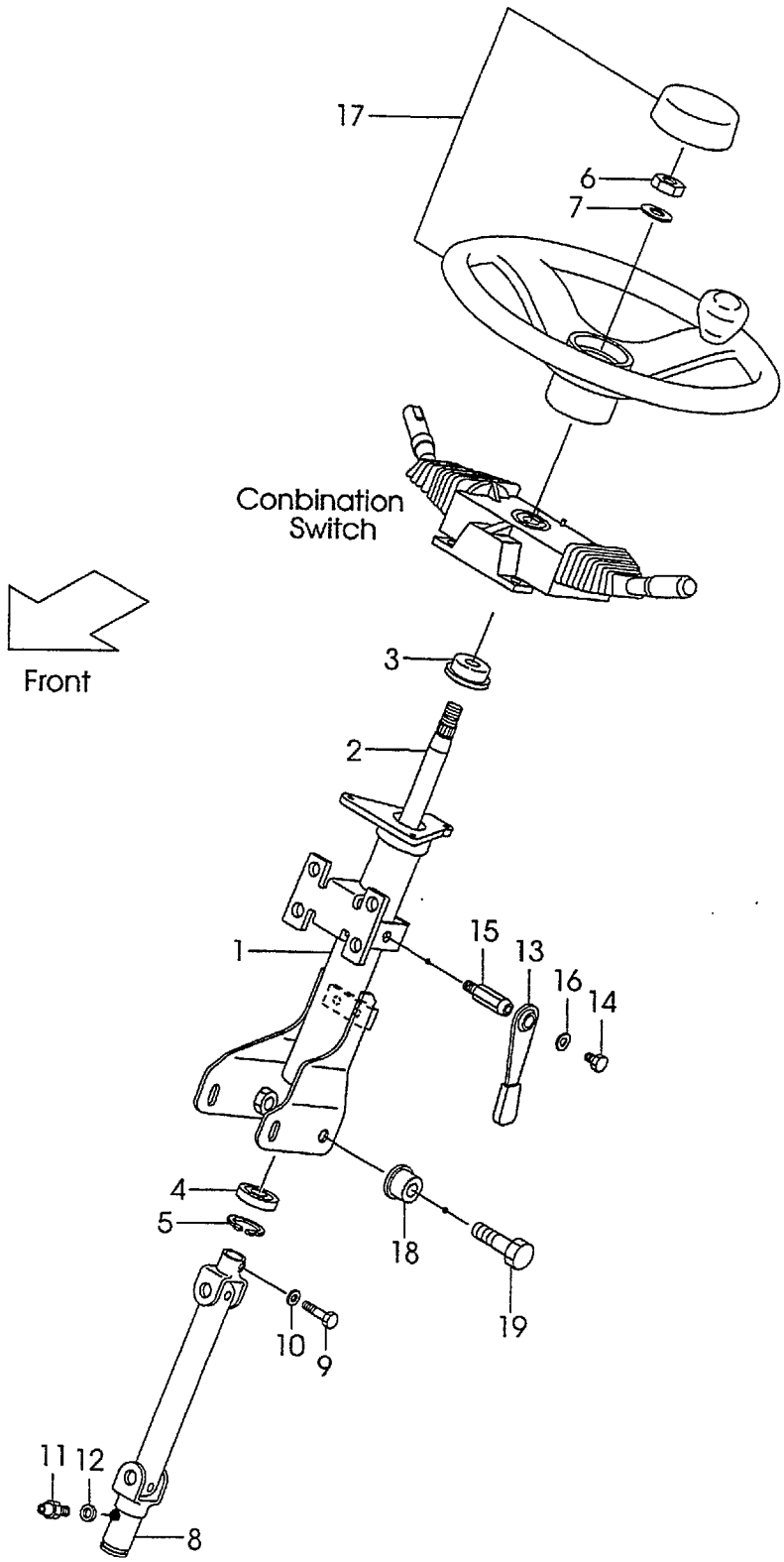

A:FG30C6 C:FD30C6
B:FG30T6 D:FD30T6

Fig.32
(F5034110)

Item No	Part No.	Mark	Description	Req'd	Remarks : Serial No.
A1	239A4-12102		SHAFT-ASSY,STEERING	1	INC.1-12
A2	239A4-12112		SHAFT,STEERING	1	INC.1-7
1	NO PART NO.	#	COLUMN	1	
2	NO PART NO.	#	SHAFT	1	
3	NO PART NO.	#	BUSHING	1	
4	NO PART NO.	#	BRG,BALL	1	
5	NO PART NO.	#	RING,SNAP	1	
6	01402-00014		NUT	1	
7	14354-12271		WASHER	1	
A3	239A4-12121		JOINT-ASSY	1	INC.8-12
8	NO PART NO.	#	JOINT	1	
9	NO PART NO.	#	BOLT	1	
10	NO PART NO.	#	WASHER	1	
11	NO PART NO.	#	FITTING	1	
12	NO PART NO.	#	WASHER	1	
A4	239A4-12402		LEVER-ASSY,TILT-LOCK	1	INC.13-16
13	239A4-12411		LEVER	1	
14	239A4-12441		BOLT	1	
15	239A4-12431		BOLT,LOCK	1	
16	214A4-12161		WASHER	1	
17	209K4-10801		WHEEL-ASSY,STEERING	1	
18	216G4-12101		BUSHING	2	
19	216G4-12111		BOLT	2	

Fig.33 GEAR BOX
(F5034120)

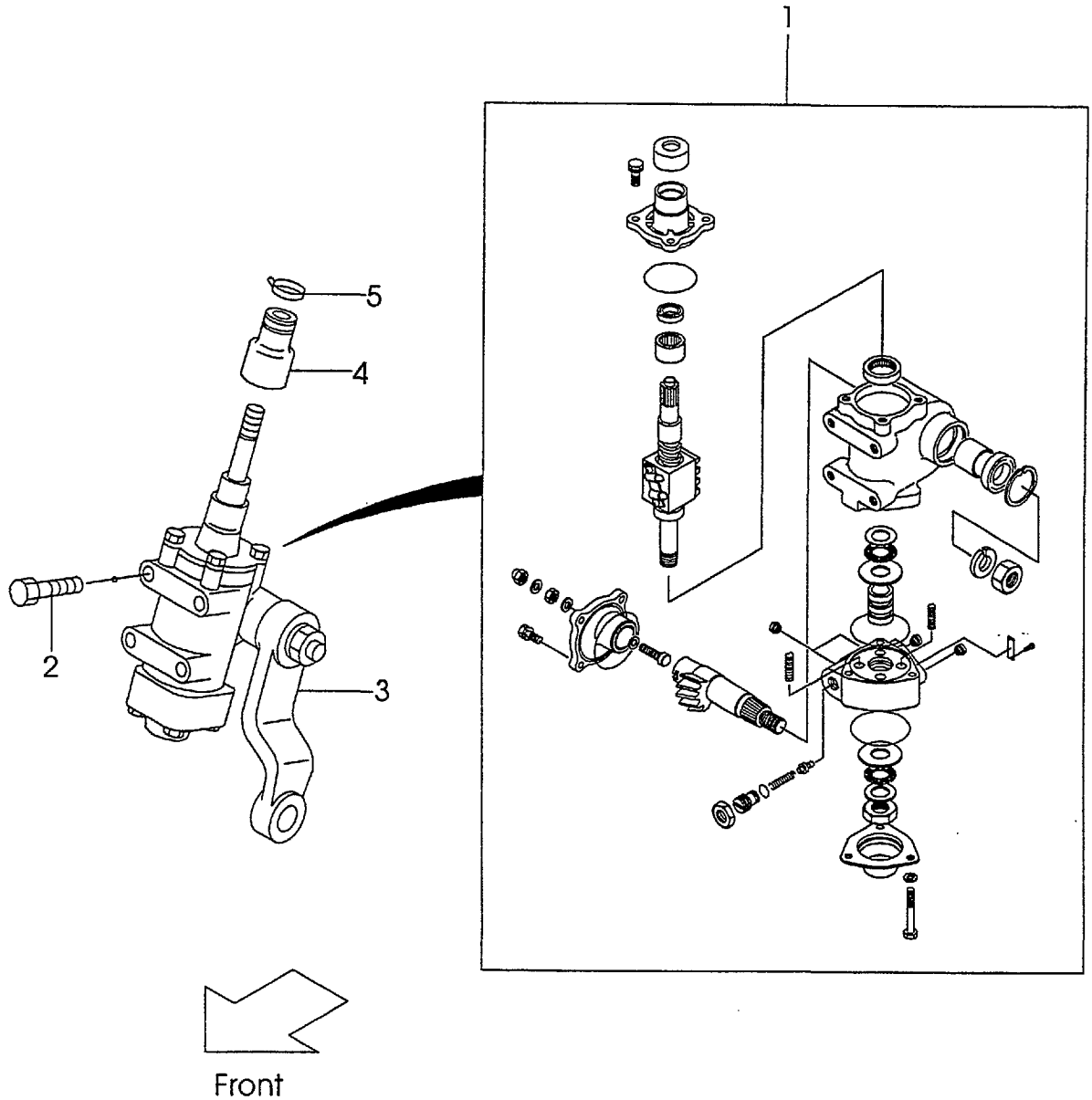

Fig.33
(F5034120)

A:FG30C6 C:FD30C6
B:FG30T6 D:FD30T6

Item No	Part No.	Mark	Description	Req'd	Remarks : Serial No.
1	239A4-12201		BOX,GEAR	1	
2	01184-12030		BOLT	4	
3	239A4-22001		ARM,PITMAN	1	
4	239A4-12211		BOOT	1	
5	04913-11200		BAND	1	

Fig.34 ORBITROL [OBT]<EXC>

(F5034140)

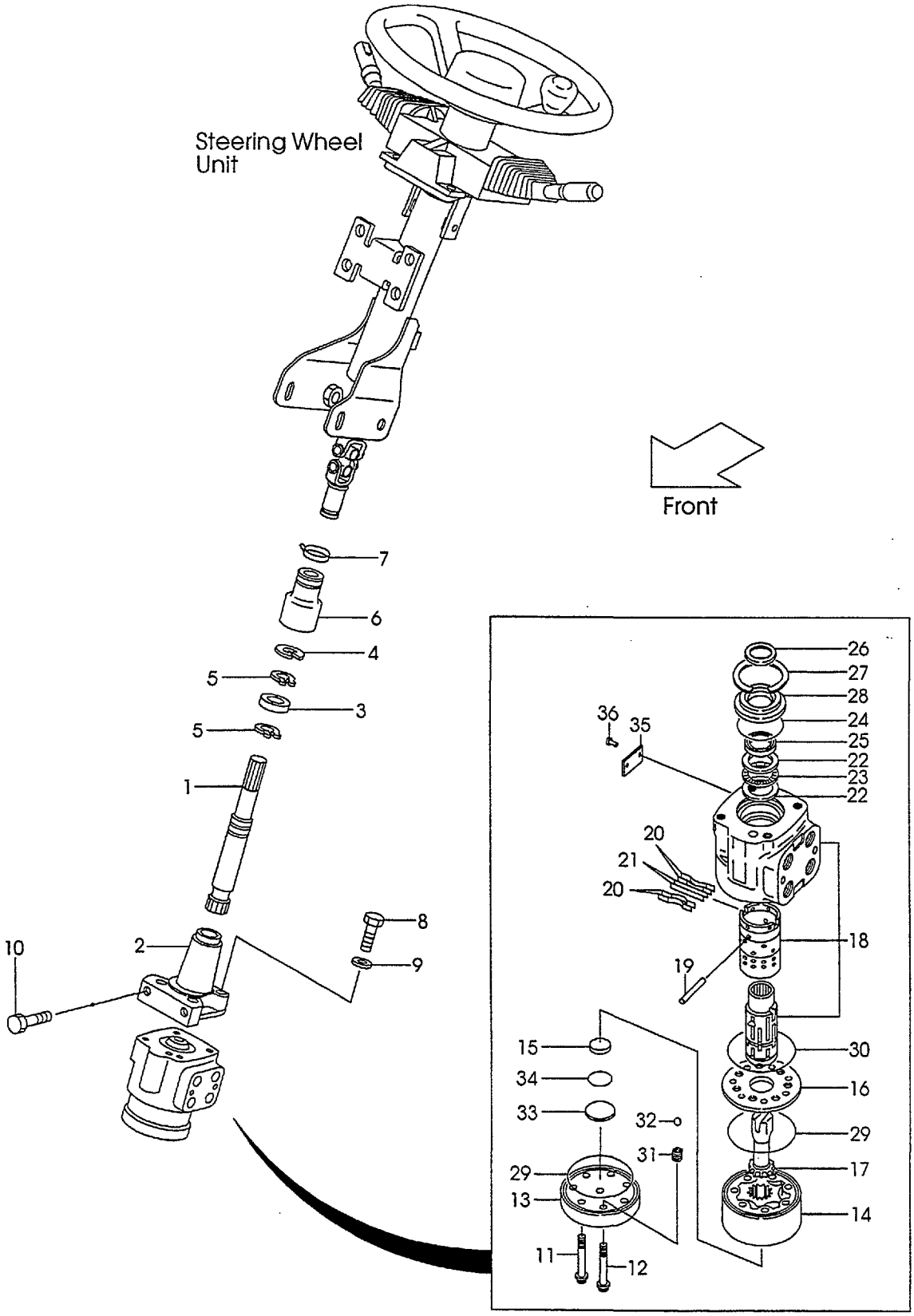

A:FG30C6 C:FD30C6
B:FG30T6 D:FD30T6

Fig.34
(F5034140)

Item No	Part No.	Mark	Description	Req'd	Remarks : Serial No.
A1	539A2-40201		SHAFT-ASSY	1	[OBT][EXC]INC.1-5
1	539A2-42001		SHAFT	1	[OBT][EXC]
2	539A2-42011		FLANGE	1	[OBT][EXC]
3	03010-06904		BRG,BALL	1	[OBT][EXC]
4	02110-00037		RING,SNAP	1	[OBT][EXC]
5	02100-00020		RING,SNAP	2	[OBT][EXC]
6	239A4-12211		BOOT	1	[OBT][EXC]
7	04913-11200		BAND	1	[OBT][EXC]
8	80110-00628		BOLT	4	[OBT][EXC]
9	80430-00006		WASHER	4	[OBT][EXC]
10	534A2-42031		BOLT	2	[OBT][EXC]
A2	15604-10202		UNIT,ORBITROL	1	[OBT][EXC]INC.11-36
11	26094-17151		SCREW	6	[OBT][EXC]
12	NO PART NO.		SCREW	1	[OBT][EXC]
13	26094-17141		CAP	1	[OBT][EXC]
14	26094-17121		GEROTOR	1	[OBT][EXC]
15	514A2-42601		SPACER	1	[OBT][EXC]
16	26094-17101		PLATE	1	[OBT][EXC]
17	26094-17111		SHAFT,DRIVE	1	[OBT][EXC]
18	516G2-42401		CONTROL PARTS	1	[OBT][EXC]
19	26094-17091		PIN	1	[OBT][EXC]
20	26094-17081		SPRING	4	[OBT][EXC]
21	26314-17021		SPRING	2	[OBT][EXC]
22	NO PART NO.	*	RACE,BRG	1	[OBT][EXC]
23	NO PART NO.	*	BRG	2	[OBT][EXC]
24	NO PART NO.	*	O-RING	1	[OBT][EXC]
25	529F2-42611	*	SEAL,OIL	1	[OBT][EXC]
26	NO PART NO.	*	SEAL,DUST	1	[OBT][EXC]
27	26094-17001		RING	1	[OBT][EXC]
28	26314-17001		BUSHING	1	[OBT][EXC]
29	NO PART NO.	*	O-RING	2	[OBT][EXC]
30	NO PART NO.	*	O-RING	1	[OBT][EXC]
31	NO PART NO.		SCREW,ADAPTER	1	[OBT][EXC]
32	524W2-42651		BALL	1	[OBT][EXC]
33	514A2-42611		PLUG	1	[OBT][EXC]
34	514A2-42621	*	O-RING	1	[OBT][EXC]
35	NO PART NO.		PLATE,NAME	1	[OBT][EXC]
36	NO PART NO.		RIVET	2	[OBT][EXC]
K1	26094-17021		KIT,BRG	1	[OBT][EXC]INC.22,23
K2	516G2-42411		KIT,SEAL	1	[OBT][EXC]INC.24-26,29,30,34

Fig.35 FITTING (GEAR BOX & ORBITROL)
(F5034150)

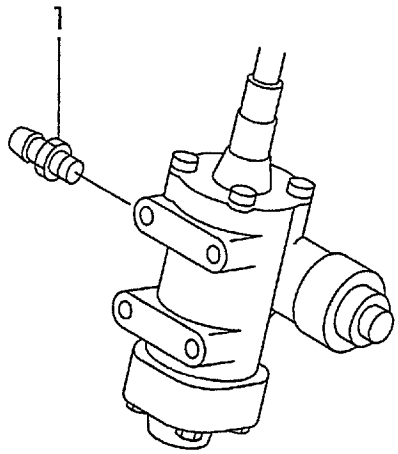

GEAR BOX

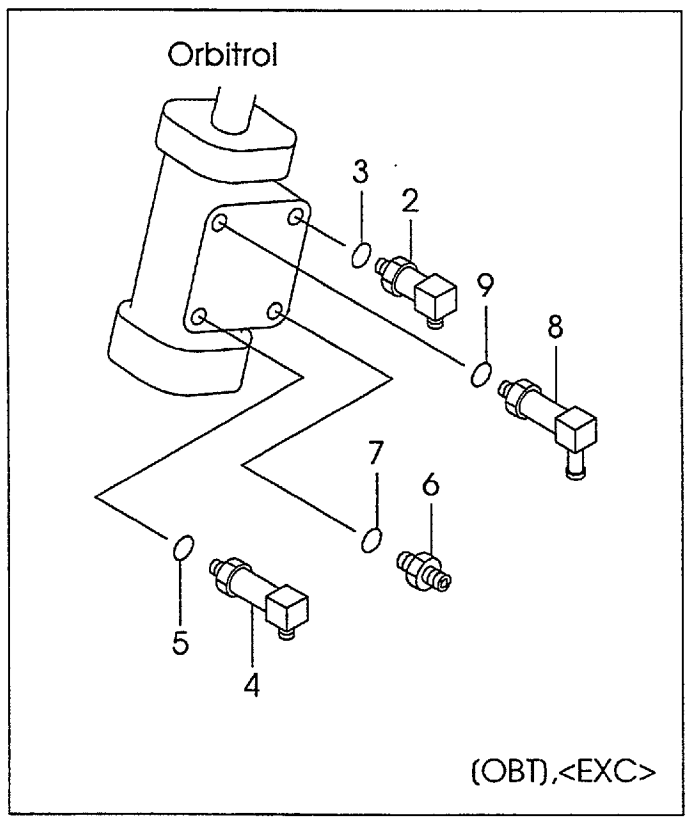

A:FG30C6 C:FD30C6
B:FG30T6 D:FD30T6

Fig.35
(F5034150)

Item No	Part No.	Mark	Description	Req'd	Remarks : Serial No.
1	25597-62211		NIPPLE	1	
A1	23457-60301		ELBOW	1	[OBT][EXB][EXC]INC.2,3
2	NO PART NO.	#	ELBOW	1	[OBT][EXB][EXC]
3	89140-00006		O-RING	1	[OBT][EXB][EXC]
A2	23457-60311		ELBOW	1	[OBT][EXB][EXC]INC.4,5
4	NO PART NO.	#	ELBOW	1	[OBT][EXB][EXC]
5	89140-00006		O-RING	1	[OBT][EXB][EXC]
A1	22197-60231		NIPPLE	1	[OBT][EXB][EXC]INC.6,7
6	NO PART NO.	#	NIPPLE	1	[OBT][EXB][EXC]
7	89140-00006		O-RING	1	[OBT][EXB][EXC]
A2	516G2-40451		ELBOW	1	[OBT][EXB][EXC]INC.8,9
8	NO PART NO.	#	ELBOW	1	[OBT][EXB][EXC]
9	89140-00006		O-RING	1	[OBT][EXB][EXC]

Fig.36 DRAG LINK
(F5034210)

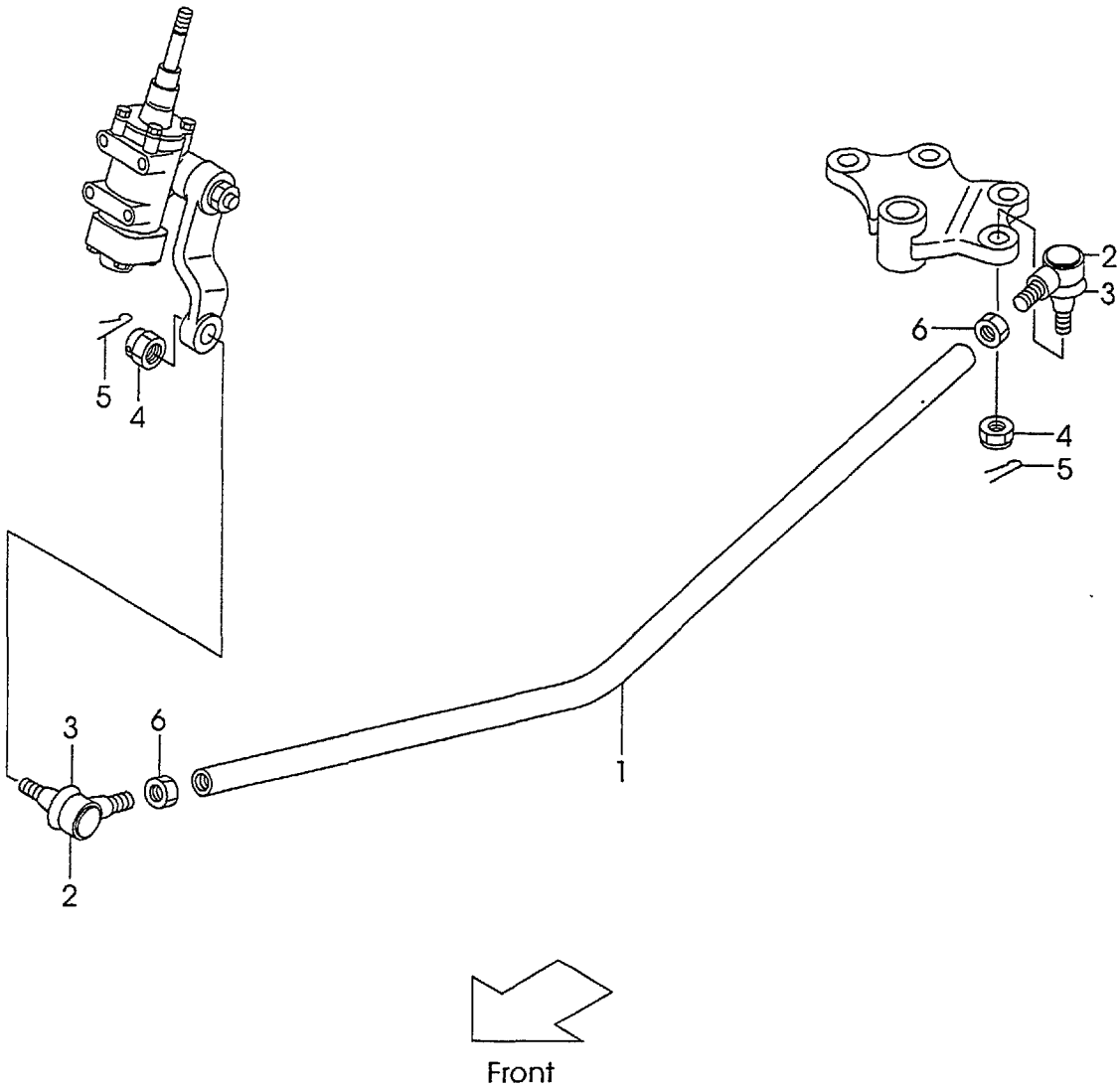

Fig.36
(F5034210)

A:FG30C6 C:FD30C6
B:FG30T6 D:FD30T6

Item No	Part No.	Mark	Description	Req'd	Remarks : Serial No.
1	234F4-22101		LINK,DRAG	1	
A1	24234-32331		JOINT-ASSY,BALL	2	INC.2,3
2	24234-32342		JOINT,BALL	2	
3	24234-32352		COVER,DUST	2	
4	01412-10016		NUT	2	
5	02200-32032		PIN,COTTER	2	
6	01402-00022		NUT	2	

Fig.37 STEERING AXLE

(F5034310)

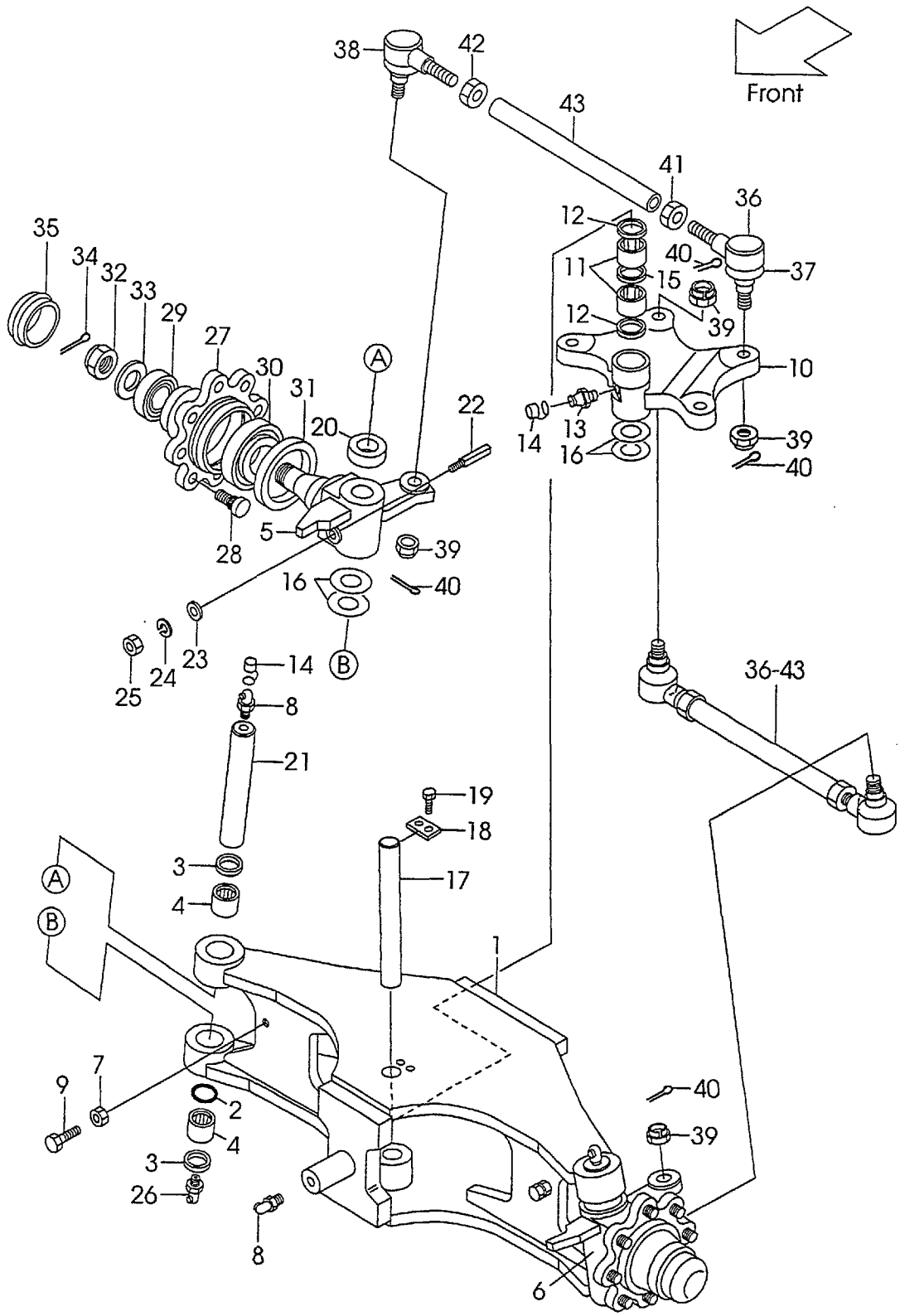

A:FG30C6 C:FD30C6
B:FG30T6 D:FD30T6

Item No	Part No.	Mark	Description	Req'd	Remarks : Serial No.
A1	234A4-30001		AXLE-ASSY	1	INC.1-42
A2	234A4-30011		AXLE-SUB-ASSY	1	INC.1-4
1	NO PART NO.	#	AXLE	1	
2	23654-32161	*	O-RING	2	
3	214A4-32161	*	SEAL,DUST	4	
4	03146-13201	*	BRG,NEEDLE	4	
5	234A4-32261		KNUCKLE,RH	1	
6	234A4-32271		KNUCKLE,LH	1	
7	01402-00012		NUT	2	
8	04901-00190	*	FITTING	4	
9	01100-12030		BOLT	2	
10	24454-30512		ARM,CENTER	1	
11	03146-13201	*	BRG,NEEDLE	2	
12	23654-32081	*	SEAL,DUST	2	
13	04901-00100	*	FITTING	1	
14	22199-12401		CAP	7	
15	24454-32391	*	SPACER	1	
16	22214-30321	*	SHIM	7	
17	24454-32161		PIN,CENTER,ARM	1	
18	20224-30061	*	PLATE	1	
19	01183-08016	*	BOLT & WASHER	2	
20	03126-83201	*	BRG,BALL	2	
21	24454-32232		PIN,KING	2	
22	215E4-32341	*	PIN,LOCK	2	
23	02000-00010	*	WASHER	2	
24	02010-00010	*	WASHER	2	
25	01400-00010	*	NUT	2	
26	04901-00191		FITTING	2	
27	214A4-32041		HUB	2	
28	23654-32041		BOLT,HUB	16	
29	03071-30207		BRG,TAPER-ROLLER	2	
30	03071-30211		BRG,TAPER-ROLLER	2	
31	03217-08501		SEAL,OIL	2	
32	01412-00030		NUT	2	
33	02000-00030		WASHER	2	
34	02200-06055		PIN	2	
35	214A4-32051		CAP,HUB	2	
A3	214A4-30401		ROD-ASSY,TIE	2	INC.36-43
A4	24234-32331		JOINT-ASSY,BALL	2	INC.36,37
36	24234-32342		JOINT,BALL	2	
37	24234-32352		COVER,DUST	2	
38	24234-32381		END,LH	2	
39	01412-10016		NUT,CASTLE	4	
40	02200-32032		PIN	4	
41	24234-32411		NUT	2	
42	24234-32421		NUT	2	
43	214A4-32131		ROD,TIE	2	
K1	214A4-39801		KIT,REPAIR	1	INC.2-4,8,16,20,22-25
K2	24454-39812		KIT,REPAIR	1	INC.11-13,15,16,18,19

Fig.38 STEERING AXLE [OBT],<EXC>
(F5034320)

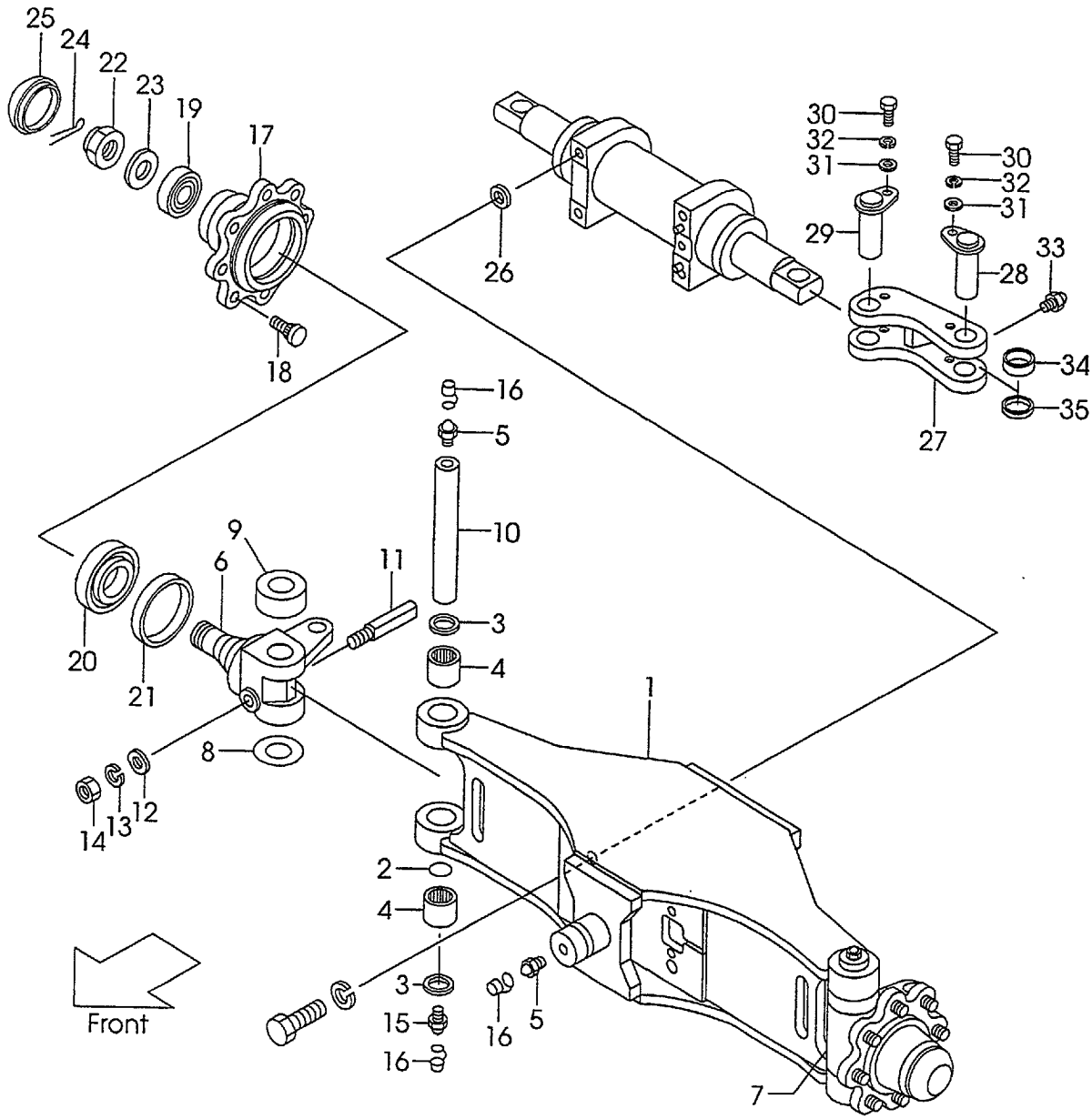

A:FG30C6 C:FD30C6
B:FG30T6 D:FD30T6

Item No	Part No.	Mark	Description	Req'd	Remarks : Serial No.
A1	533A2-40402		AXLE-ASSY,STEERING	1	[OBT][EXC]INC.1-4
1	NO PART NO.	#	AXLE	1	[OBT][EXC]
2	23654-32161	*	O-RING	2	[OBT][EXC]
3	214A4-32161	*	SEAL,DUST	4	[OBT][EXC]
4	03146-13201	*	BRG,NEEDLE	4	[OBT][EXC]
5	04901-00190	*	FITTING	4	[OBT][EXC]
6	533A2-42032		KNUCKLE,RH	1	[OBT][EXC]
7	533A2-42042		KNUCKLE,LH	1	[OBT][EXC]
8	22214-30321	*	SHIM	6	[OBT][EXC]
9	03126-83201	*	BRG,BALL	2	[OBT][EXC]
10	24454-32232		KINGPIN	2	[OBT][EXC]
11	215E4-32341	*	PIN,LOCK	2	[OBT][EXC]
12	02000-00010	*	WASHER	2	[OBT][EXC]
13	02010-00010	*	WASHER	2	[OBT][EXC]
14	01400-00010	*	NUT	2	[OBT][EXC]
15	04901-00191	*	FITTING	2	[OBT][EXC]
16	22199-12401		CAP	6	[OBT][EXC]
A2	214A4-30301		HUB-ASSY,REAR	2	[OBT][EXC]INC.17-21
17	214A4-32041		HUB	2	[OBT][EXC]
18	23654-32041		BOLT,HUB	16	[OBT][EXC]
19	03071-30207		BRG,TAPER-ROLLER	2	[OBT][EXC]
20	03071-30211		BRG,TAPER-ROLLER	2	[OBT][EXC]
21	03217-08501		SEAL,OIL	2	[OBT][EXC]
22	01412-00030		NUT	2	[OBT][EXC]
23	02000-00030		WASHER	2	[OBT][EXC]
24	02200-06055		PIN	2	[OBT][EXC]
25	214A4-32051		CAP,HUB	2	[OBT][EXC]
26	514A2-42481		SHIM	1	[OBT][EXC]
27	533A2-42071		YOKE	2	[OBT][EXC]
28	514A2-42721		PIN	2	[OBT][EXC]
29	533A2-42101		PIN	2	[OBT][EXC]
30	01103-08016		BOLT	4	[OBT][EXC]
31	02000-00008		WASHER	4	[OBT][EXC]
32	02011-00008		WASHER	4	[OBT][EXC]
33	272A8-52101		NIPPLE	2	[OBT][EXC]
34	215E4-52231		JOINT	2	[OBT][EXC]
35	215E4-52301		COLLAR	2	[OBT][EXC]
K1	214A4-39801		KIT,REPAIR	1	[OBT][EXC]INC.2-5,8,9,11-15

Fig.39 AXLE SUPPORT
(F5034360)

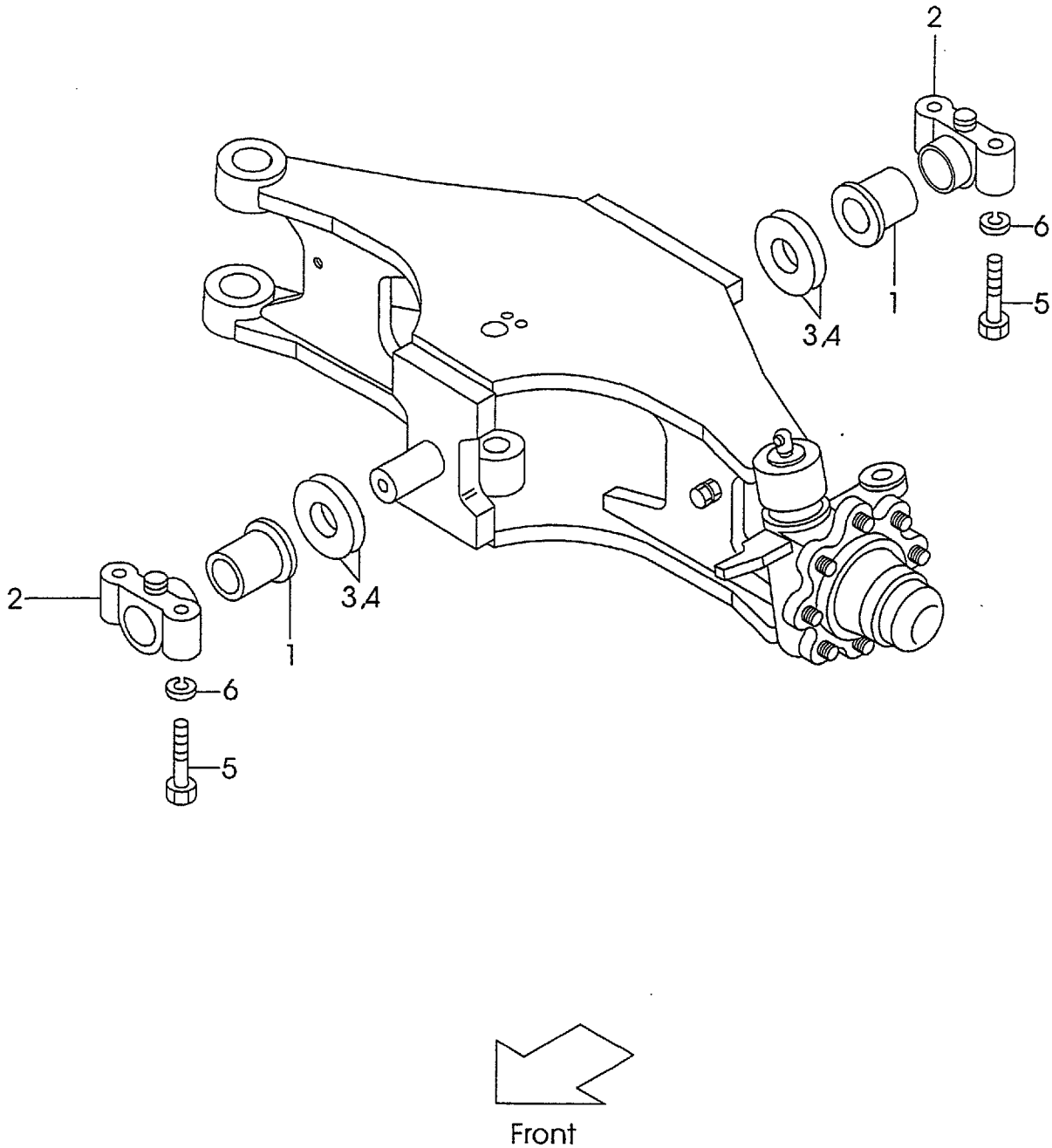

Fig.39
(F5034360)

A:FG30C6 C:FD30C6
B:FG30T6 D:FD30T6

Item No	Part No.	Mark	Description	Req'd	Remarks : Serial No.
A1	214A6-10451		SUPPORT-ASSY,AXLE	2	INC.1-6
1	214A6-12601		BUSHING	2	
2	214A6-12611		SUPPORT	2	
3	214A4-32201		SHIM,T-0.5	1	
4	214A4-32211		SHIM,T-1.0	2	
5	01100-20080		BOLT	4	
6	02010-00020		WASHER	4	

Fig.40 HUB NUT
(F5034410)

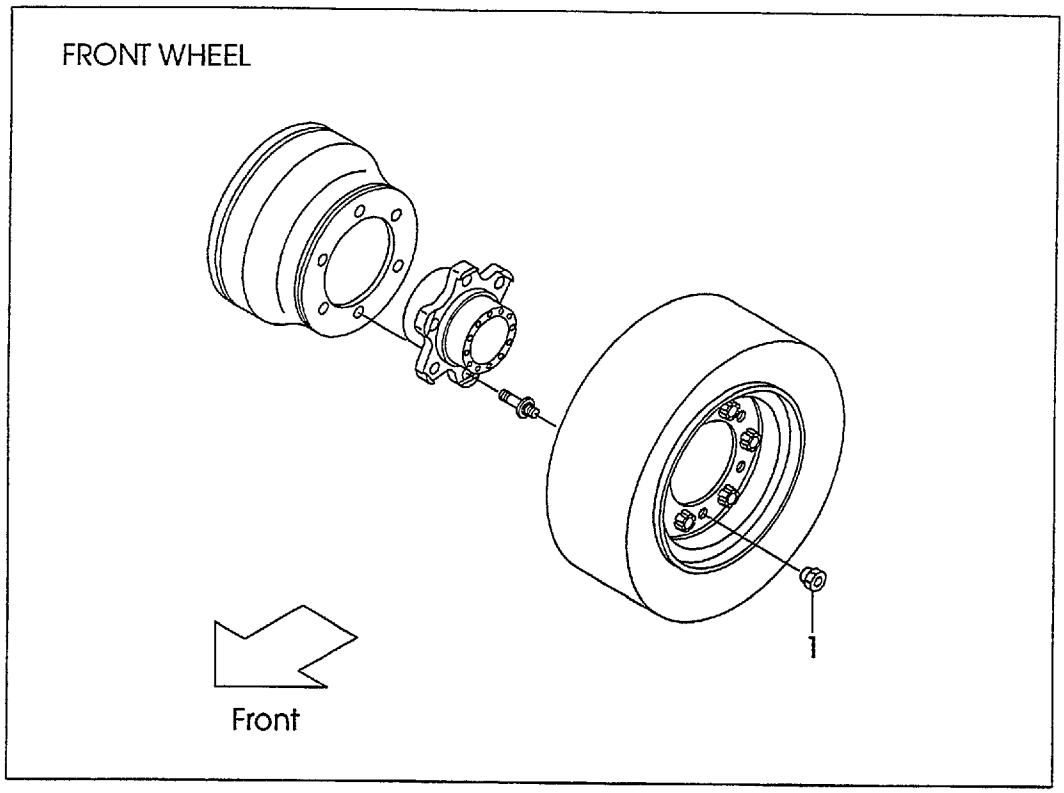

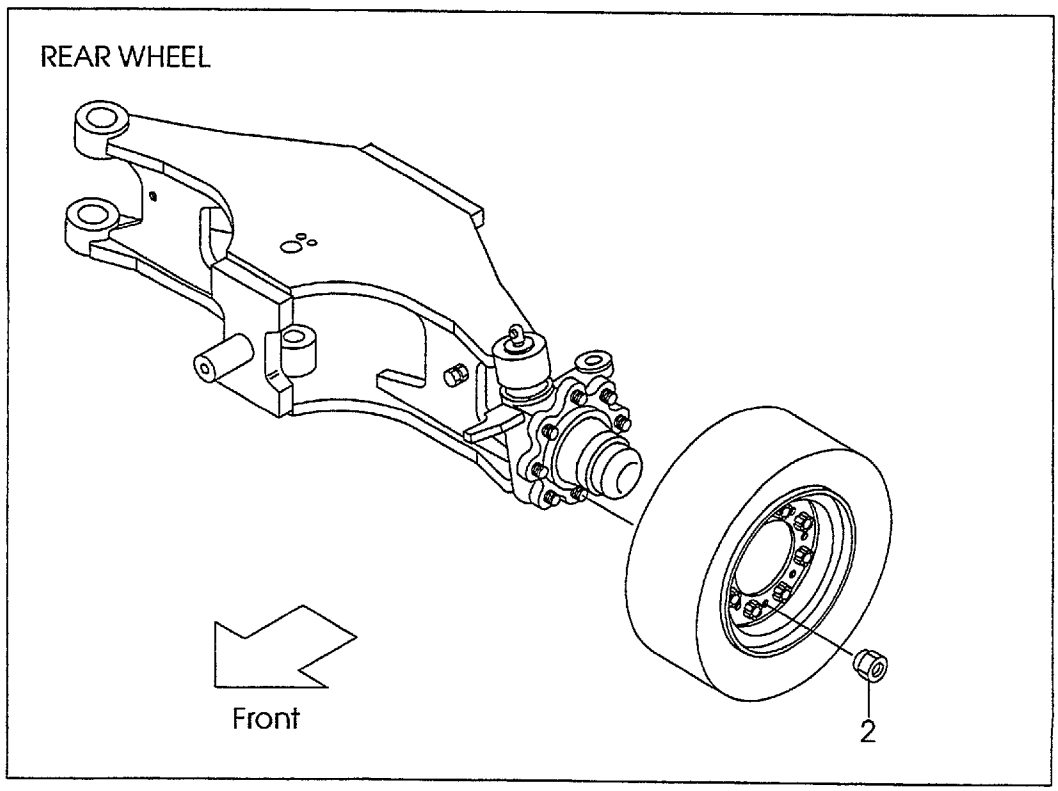

Fig.40
(F5034410)

A:FG30C6 C:FD30C6
B:FG30T6 D:FD30T6

Item No	Part No.	Mark	Description	Req'd	Remarks : Serial No.
1	23913-02041		NUT,FRONT-HUB	12	
2	23654-34051		NUT,REAR-HUB	16	

Fig.41 FRONT WHEEL
(F5034430)

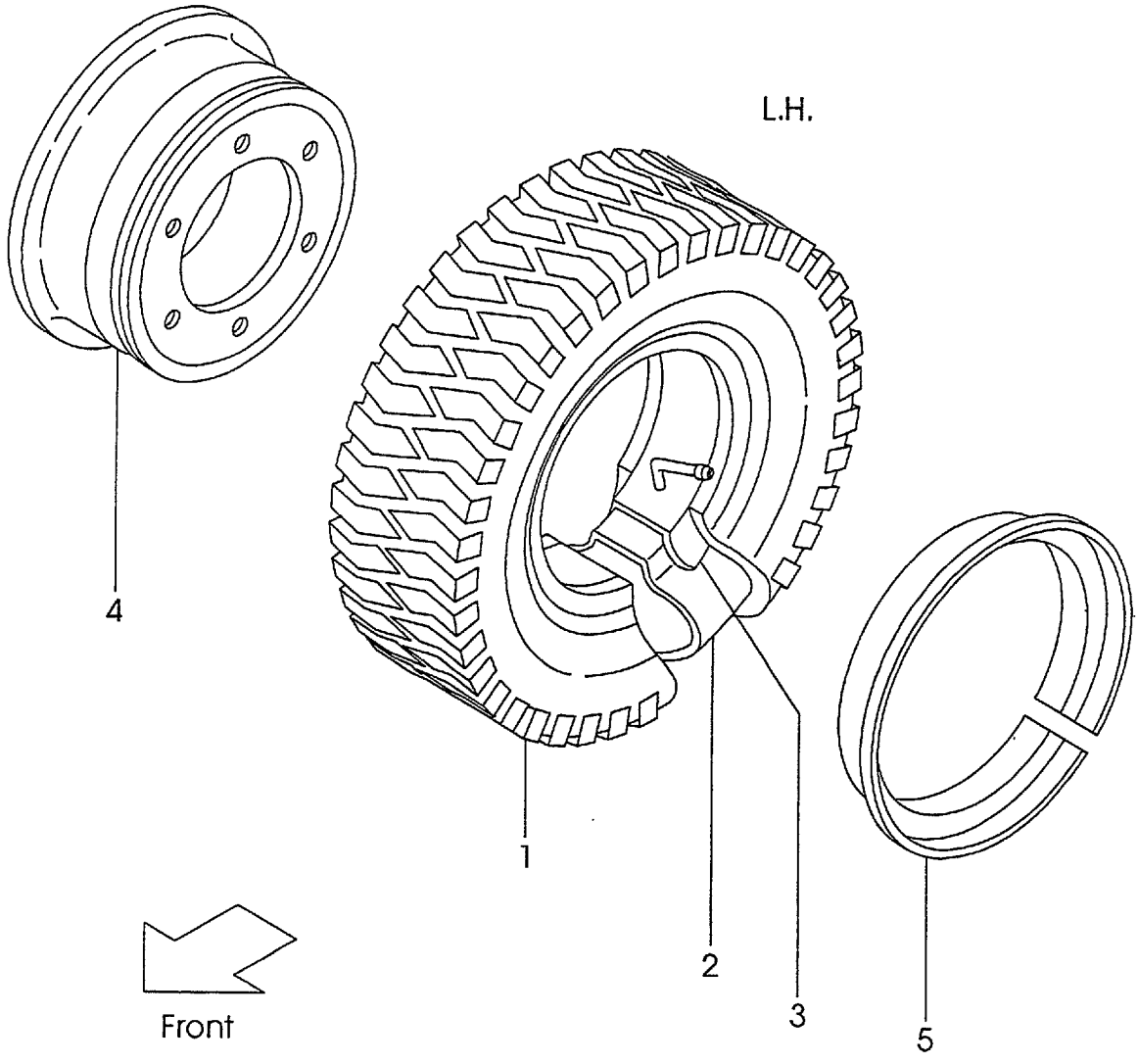

A:FG30C6 C:FD30C6
B:FG30T6 D:FD30T6

Item No	Part No.	Mark	Description	Req'd	Remarks : Serial No.
A1	24454-40201		WHEEL-ASSY,FRONT	2	(J-LUG)INC.1-5
A2	24454-40211		TIRE-ASSY	2	INC.1-3
1	52436-82101		TIRE	2	(28X9-15)
2	52436-82111		TUBE	2	
3	52436-82121		FLAP	2	
A4	24454-40221		RIM-ASSY	2	INC.4,5
4	NO PART NO.	#	RIM	2	
5	22439-44031		RING,SIDE	2	

Fig.42 REAR WHEEL
(F5034440)

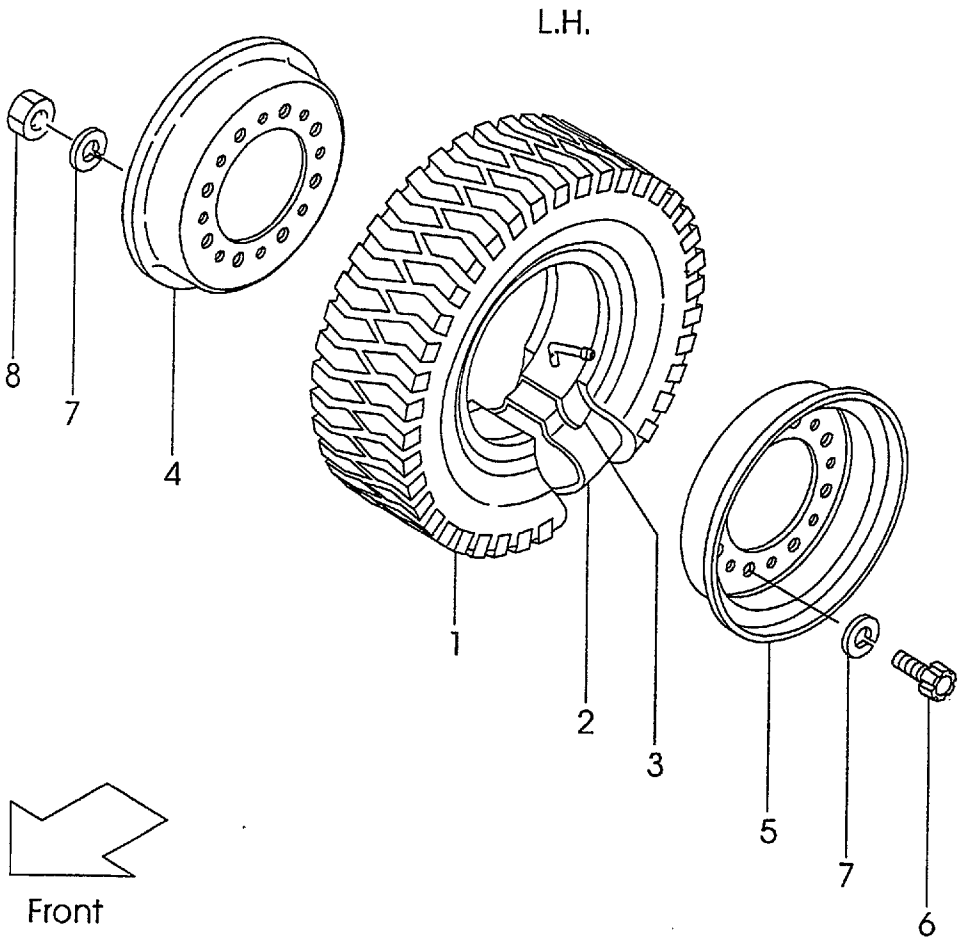

A:FG30C6 C:FD30C6
B:FG30T6 D:FD30T6

Fig.42
(F5034440)

Item No	Part No.	Mark	Description	Req'd	Remarks : Serial No.
A1	234F4-40302		WHEEL-ASSY,REAR	2	(J-LUG)INC.1-8
1	06006-65010		TIRE	2	(6.50-10)
2	06711-65010		TUBE	2	
3	06701-65010		FLAP	2	
A3	52356-80302		RIM-ASSY	2	INC.4,5
4	NO PART NO.	#	RIM,INNER	2	
5	NO PART NO.	#	RIM,OUTER	2	
6	534F3-82001		BOLT	16	
7	02011-00012		WASHER	32	
8	01400-00012		NUT	16	

Fig.43 POWER CYLINDER
(F5034510)

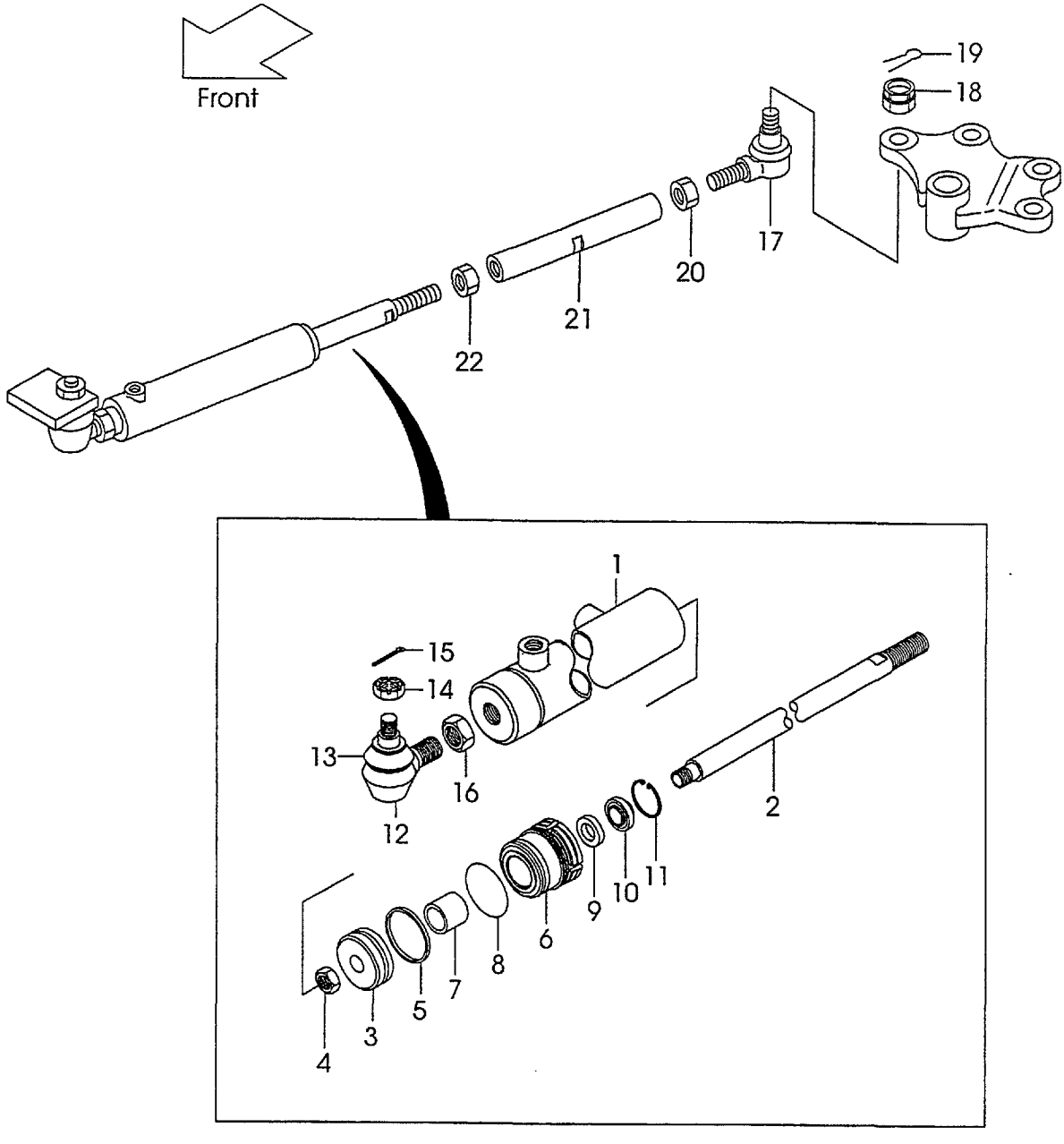

A:FG30C6 C:FD30C6
B:FG30T6 D:FD30T6

Fig.43
(F5034510)

Item No	Part No.	Mark	Description	Req'd	Remarks : Serial No.
A1	239A4-50201		CYL-ASSY,PS	1	INC.1-16
A2	214A4-50211		CYL.SUB-ASSY,PS	1	INC.1-13
1	214A4-50111		BODY,CYL	1	
A3	214A4-50121		ROD-ASSY,PISTON	1	INC.2-4
2	214A4-52041		ROD,PISTON	1	
3	214A4-52031		PISTON	1	
4	01402-10018		NUT	1	
5	25594-52362	*	SEAL	1	
A4	214A4-50131		CAP-ASSY,CYL	1	INC.6,7
6	214A4-52021		CAP,CYL	1	
7	25954-52061		BUSHING	1	
8	03350-00450	*	O-RING	1	
9	25954-52071	*	PACKING	1	
10	25954-52081	*	SEAL,DUST	1	
11	25954-52091	*	RING,SNAP	1	
A5	224W4-32301		JOINT SUB-ASY,BALL	1	INC.12,13
12	224W4-32311		BODY	1	
13	224W4-32171		COVER,DUST	1	
14	01412-10020		NUT	1	
15	02200-04040		PIN	1	
16	01402-00024		NUT	1	
17	24234-32381		END,LH	1	
18	01412-10016		NUT	2	
19	02200-32032		PIN	2	
20	01407-00022		NUT	1	
21	214J4-52001		ROD,CONNECTING	1	
22	01402-00024		NUT	1	
K1	214A4-59802		KIT,REPAIR	1	INC.5,8-11

Fig.44 POWER CYLINDER [OBT],<EXC>
(F5034520)

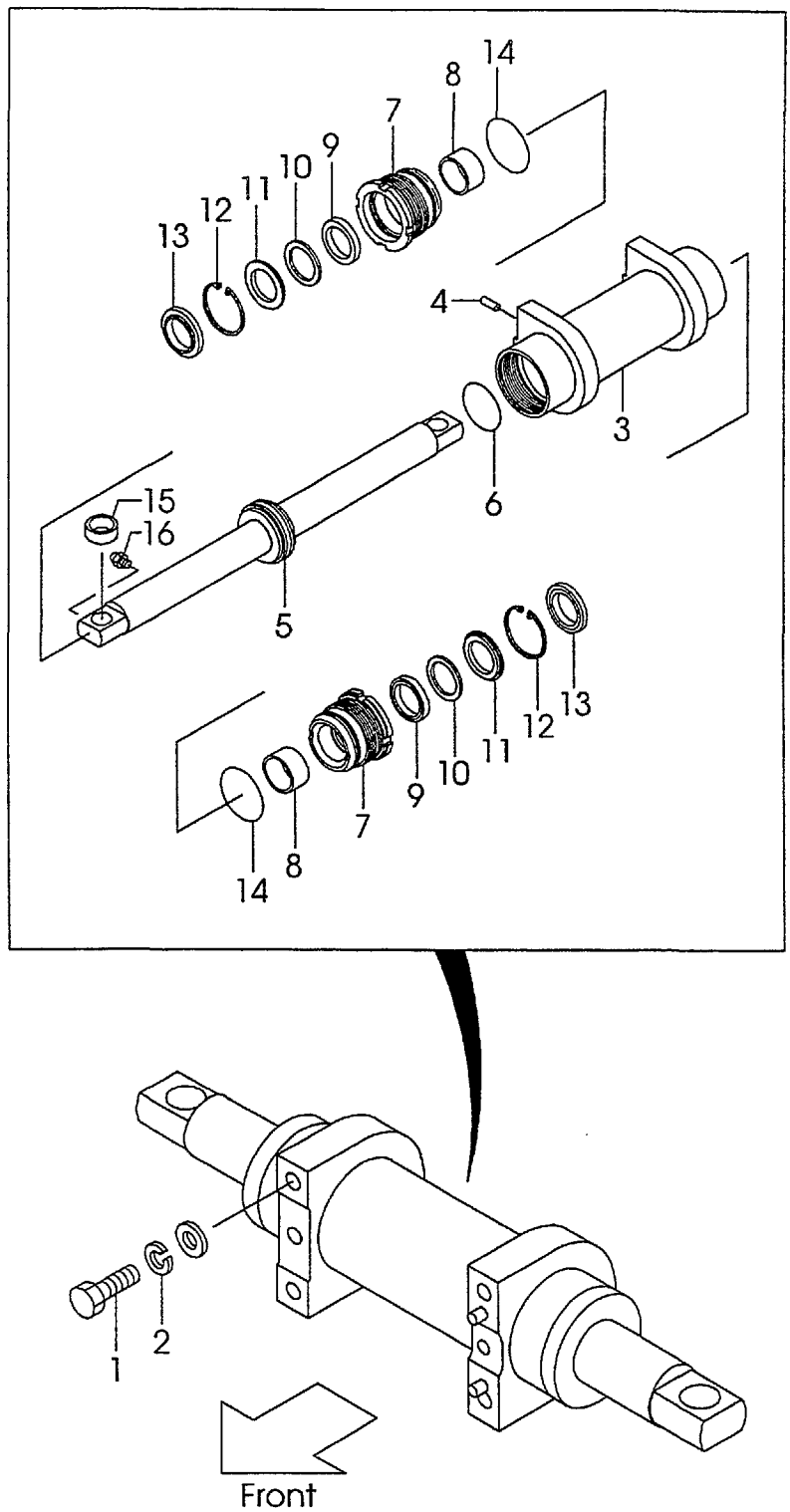

A:FG30C6 C:FD30C6
B:FG30T6 D:FD30T6

Fig.44
(F5034520)

Item No	Part No.	Mark	Description	Req'd	Remarks : Serial No.
1	01100-14035		BOLT	4	[OBT][EXC]
2	02010-00014		WASHER	4	[OBT][EXC]
A1	533A2-40201		CYL-ASSY,POWER	1	[OBT][EXC]INC.3-16
3	514A2-40462		BODY,CYL	1	[OBT][EXC]
4	02212-10020		PIN	2	[OBT][EXC]
A2	533A2-40211		ROD-ASSY,PISTON	1	[OBT][EXC]INC.5,6
5	533A2-42001		ROD,PISTON	1	[OBT][EXC]
6	25784-52342		SET,SEAL	1	[OBT][EXC]
A3	215B4-50452		CAP-ASSY,CYL	2	[OBT][EXC]INC.7-14
7	215B4-52122		CAP,CYL	2	[OBT][EXC]
8	59595-55301		BUSHING	2	[OBT][EXC]
9	25958-52201		PACKING	2	[OBT][EXC]
10	25958-52211		RING,BACK-UP	2	[OBT][EXC]
11	25958-52221		RETAINER	2	[OBT][EXC]
12	02110-00062		RING,SNAP	2	[OBT][EXC]
13	24469-42701		SEAL,DUST	2	[OBT][EXC]
14	214A8-52221		O-RING	2	[OBT][EXC]
15	533A2-42021		BUSH	2	[OBT][EXC]
16	214A8-52051		NIPPLE,GREASE	2	[OBT][EXC]

Fig.45 POWER CYLINDER FITTING [OBT],<EXC>
(F5034530)

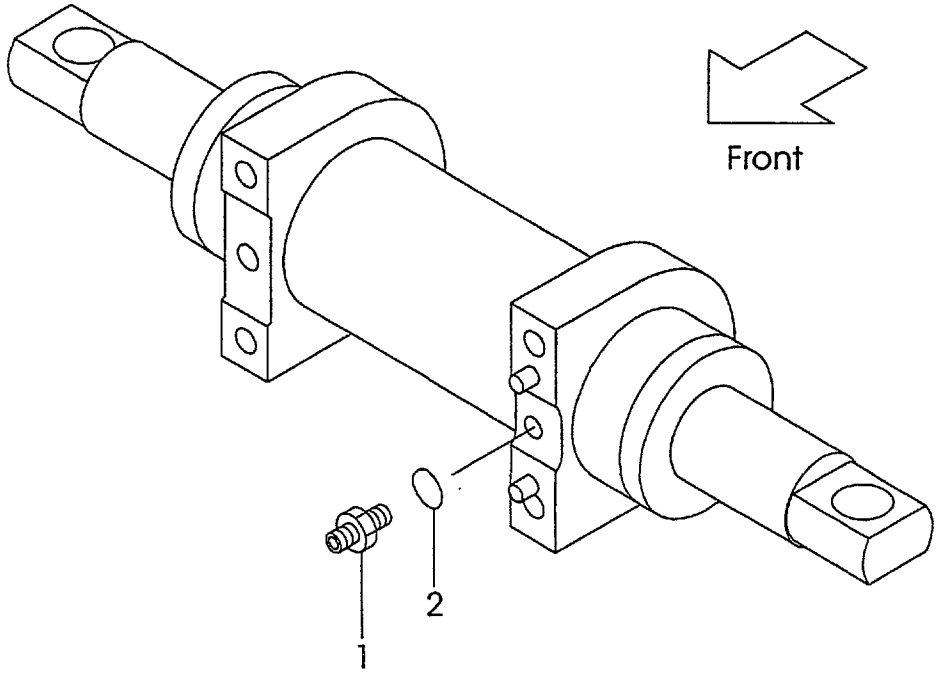

A:FG30C6 C:FD30C6
B:FG30T6 D:FD30T6

Item No	Part No.	Mark	Description	Req'd	Remarks : Serial No.
A1	224W7-62701		NIPPLE-ASSY	2	[OBT][EXC]INC.1,2
1	224W7-62711		NIPPLE	2	[OBT][EXC]
2	03320-00110		O-RING	2	[OBT][EXC]

Fig.46 OVER HEAD GUARD

(F5035110)

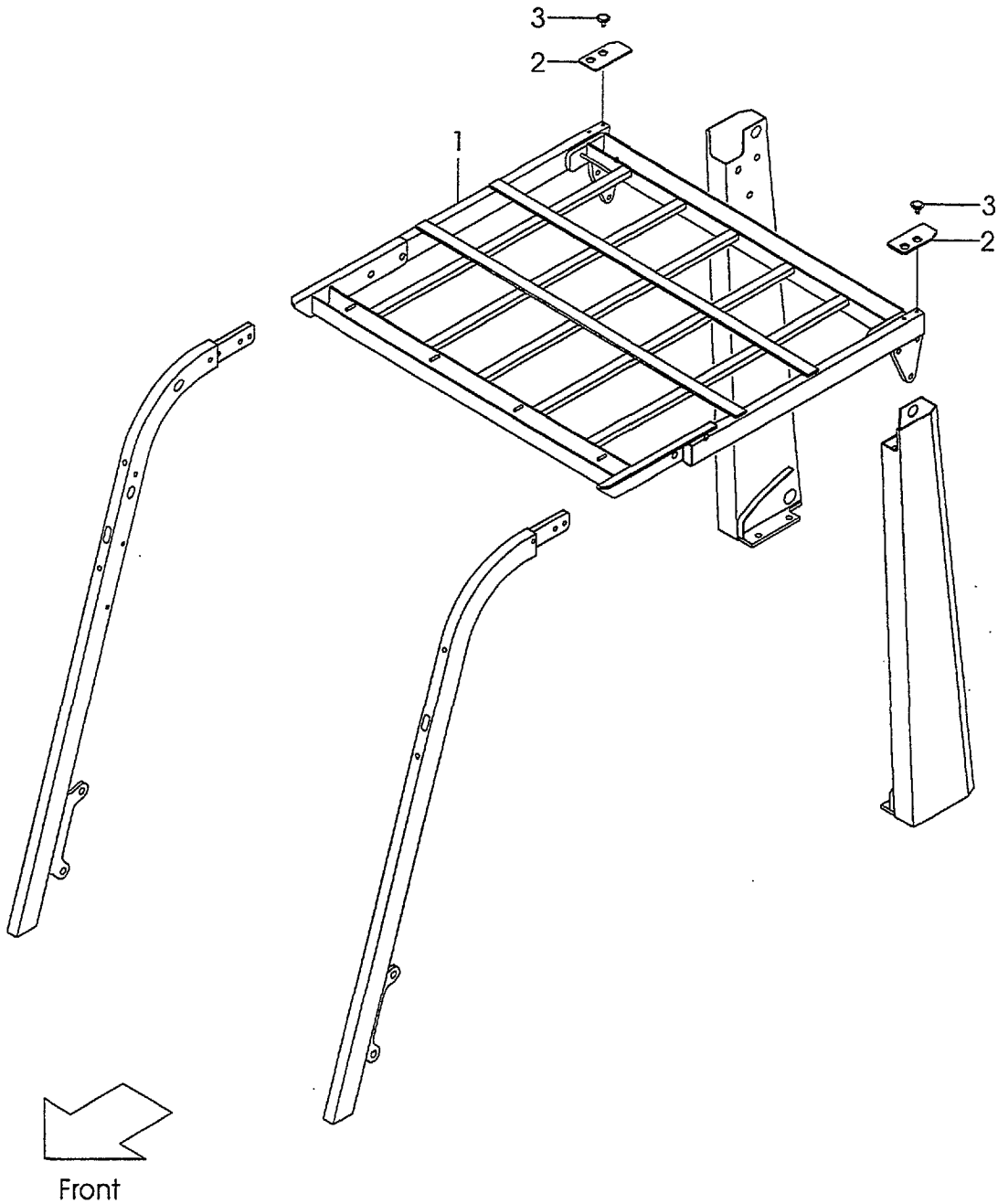

Fig.46
(F5035110)

A:FG30C6 C:FD30C6
B:FG30T6 D:FD30T6

Item No	Part No.	Mark	Description	Req'd	Remarks : Serial No.
1	218M5-10411		GUARD,HEAD	1	
-	518G2-80231		GUARD,HEAD	1	[EXB][EXC]
2	218M5-12501		COVER	2	
3	216G6-42541		CLIP	4	

Fig.47 FRONT PIPE
(F5035120)

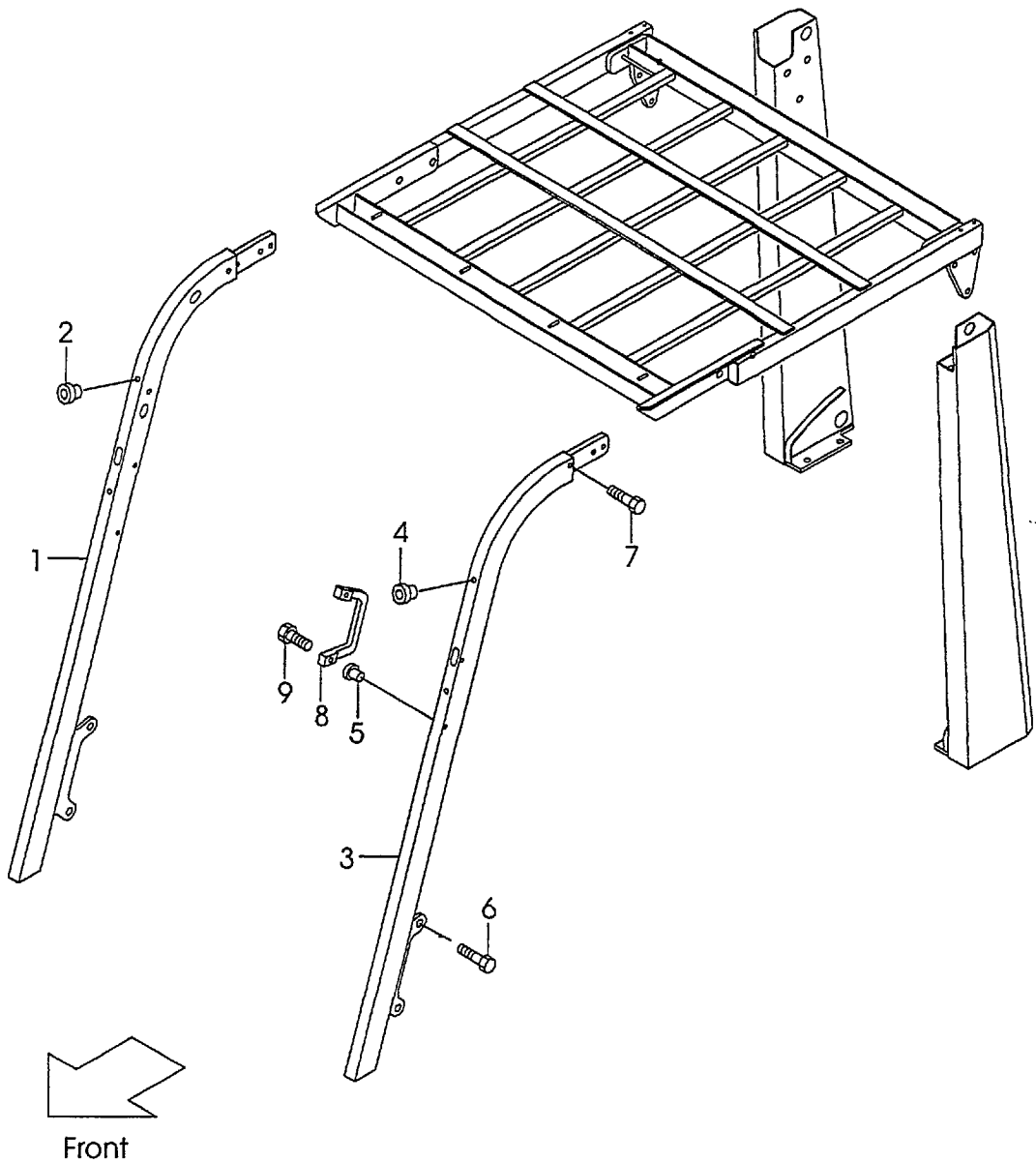

A:FG30C6 C:FD30C6
B:FG30T6 D:FD30T6

Item No	Part No.	Mark	Description	Req'd	Remarks : Serial No.
A1	239A5-10341		PIPE-ASSY,FRONT RH	1	INC.1,2
1	NO PART NO.	#	PIPE,FRONT RH	1	
2	514A5-12011		RIVET	3	
A2	239A5-10351		PIPE-ASSY,FRONT LH	1	INC.3-5
3	NO PART NO.	#	PIPE,FRONT LH	1	
4	514A5-12011		RIVET	3	
5	516G5-13151		RIVET	2	
6	01186-12025		BOLT	4	
7	01186-12035		BOLT	8	
8	516G5-13051		GRIP	1	
9	01171-06025		BOLT	2	

Fig.48 REAR PIPE

(F5035130)

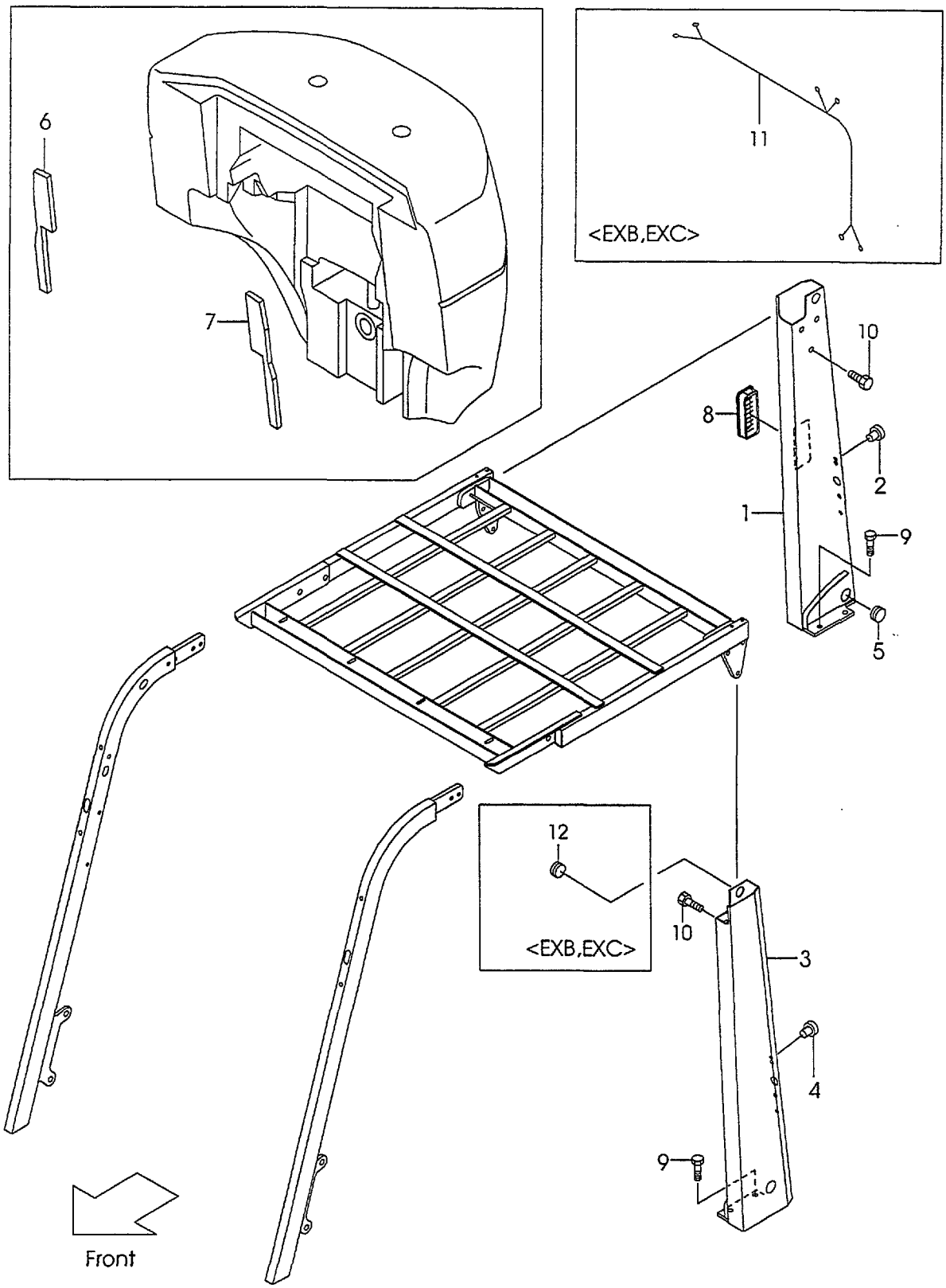

A:FG30C6 C:FD30C6
B:FG30T6 D:FD30T6

Item No	Part No.	Mark	Description	Req'd	Remarks : Serial No.
A1	239A5-10111		PIPE-ASSY,REAR RH	1	INC.1,2
-	539A2-80111		PIPE-ASSY,REAR RH	1	[EXB][EXC]INC.1,2
1	NO PART NO.	#	PIPE,REAR RH	1	
-	NO PART NO.	#	PIPE,REAR RH	1	[EXB][EXC]
2	514A5-12011		RIVET	2	
-	514A5-12011		RIVET	1	[EXB][EXC]
A2	239A5-10121		PIPE-ASSY,REAR LH	1	INC.3,4
3	NO PART NO.	#	PIPE,REAR LH	1	
-	539A2-80221		PIPE,REAR LH	1	[EXB][EXC]
4	514A5-12011		RIVET	2	
5	524W5-12091		GROMMET	1	
6	239A5-12401		RUBBER,RH	1	
7	239A5-12411		RUBBER,LH	1	
8	230C1-02041		COVER	1	
9	01186-12025		BOLT	4	
10	01186-12035		BOLT	6	
11	514T2-72061		WIRE-HARNESS,REAR HG	2	[EXB][EXC]
12	22679-47301		GROMMET	2	[EXB][EXC]
13	539A2-82251	+	SEAL	1	[EXB][EXC]

Fig.49 HEAD GUARD PARTS

(F5035160)

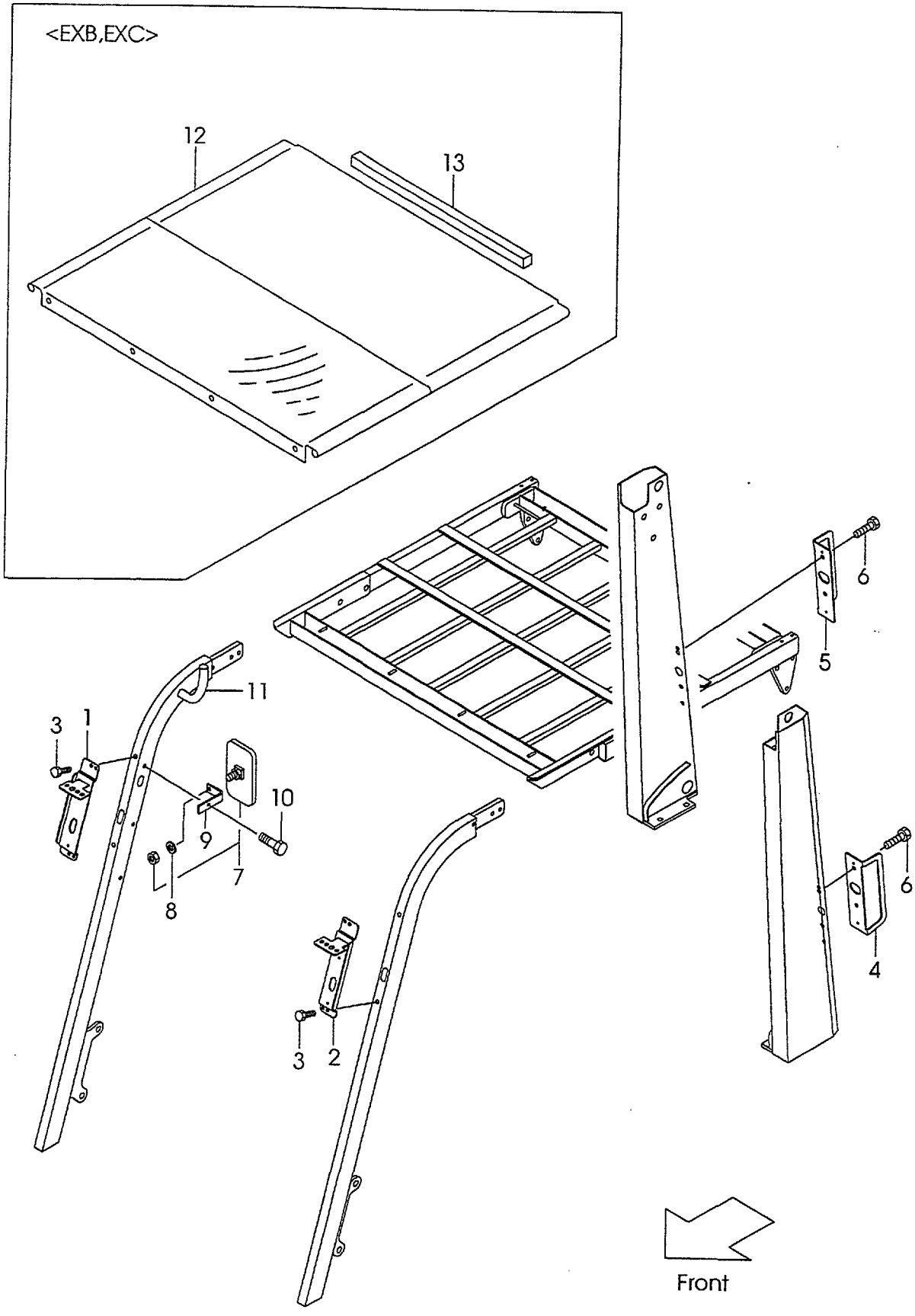

A:FG30C6 C:FD30C6
B:FG30T6 D:FD30T6

Fig.49
(F5035160)

Item No	Part No.	Mark	Description	Req'd	Remarks : Serial No.
1	239A5-12501		BRACKET,HEAD-LAMP RH	1	
2	239A5-12521		BRACKET,HEAD-LAMP LH	1	
3	01183-08025		BOLT	4	
4	534A5-12321		GUARD,REAR-LAMP LH	1	
5	534A5-12331		GUARD,REAR-LAMP RH	1	
6	01183-08016		BOLT	4	
7	239A9-92001		MIRROR	2	
8	222A9-32011		WASHER	2	
9	534A5-12571		BRACKET	2	
10	514A5-12021		BOLT	2	
11	534A5-00401		HOSE	2	
12	539A5-12001		CANVAS	1	[EXB][EXC]
13	516G5-13511		SUPPORTER	1	[EXB][EXC]

Fig.50 ACCEL PEDAL
(F5035210)

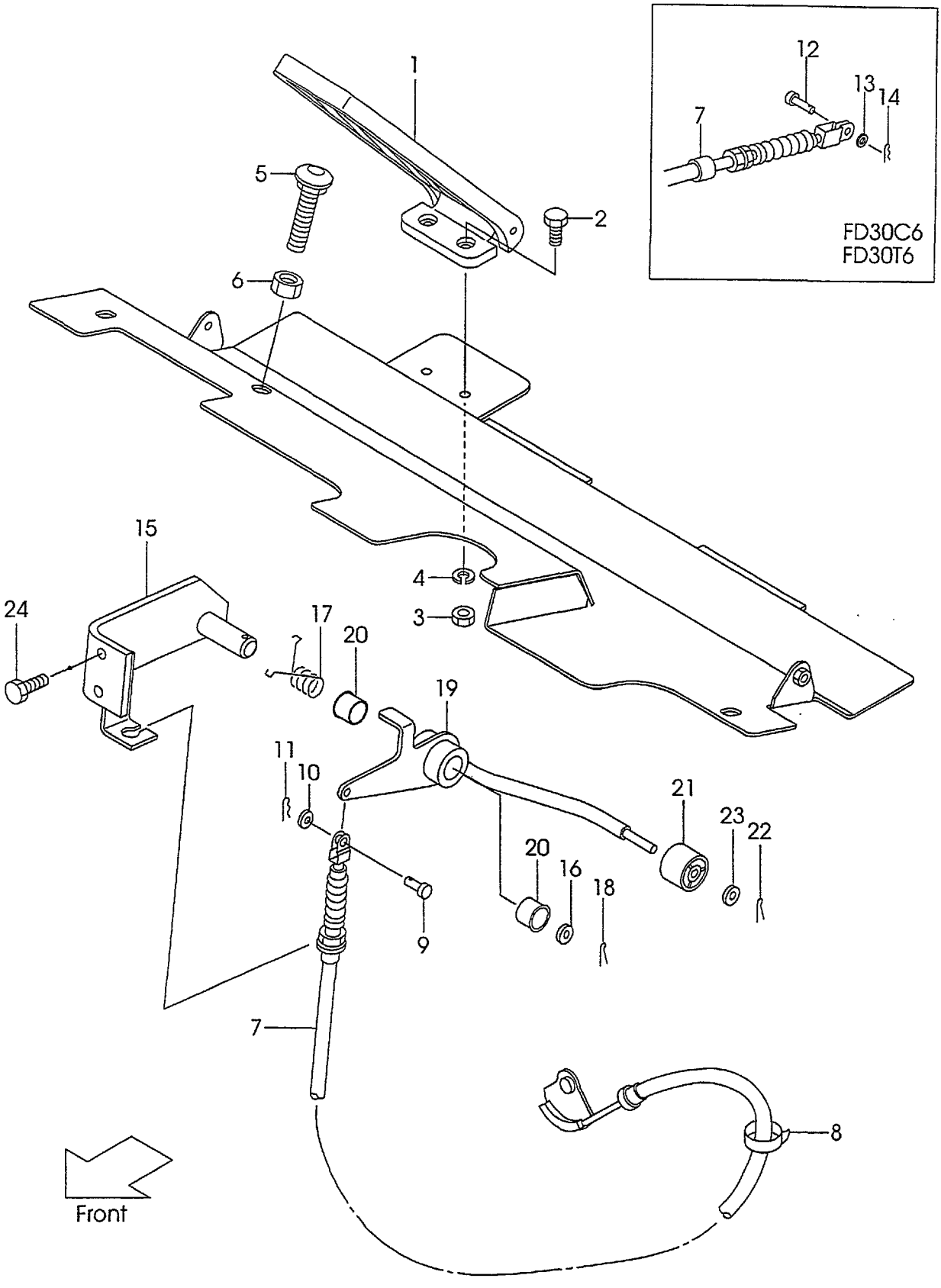

A:FG30C6 C:FD30C6
B:FG30T6 D:FD30T6

Fig.50
(F5035210)

Item No	Part No.	Mark	Description	Req'd	Remarks : Serial No.
1	214A5-22051		PEDAL,ACCEL	1	
2	01100-06012		BOLT	2	
3	01400-00006		NUT	2	
4	02010-00006		WASHER	2	
5	27455-22011		BOLT	1	A,B
-	216G5-22101		BOLT	1	C,D
6	01400-00012		NUT	1	
7	237A5-22101		WIRE,ACCEL	1	A,B
-	238F5-22101		WIRE,ACCEL	1	C,D
8	27042-42312		BAND	2	
9	02262-06015		PIN,CLEVIS	1	
10	02000-00006		WASHER	1	
11	216G5-22081		PIN,SNAP	1	
12	22717-40061		PIN,CLEVIS	1	C,D
13	02000-00005		WASHER	1	C,D
14	216G7-42161		PIN,SNAP	1	C,D
15	239A5-20402		BRACKET,LINK	1	
16	02000-00016		WASHER	1	
17	239A5-22252		SPRING	1	
18	02200-04025		PIN,COTTER	1	
A1	239A5-20302		LINK-ASSY,ACCEL	1	INC.19-23
19	239A5-20312		LINC,ACCEL	1	
20	214A7-42071		BUSHING	2	
21	214A5-22001		ROLLER	1	
22	02200-16010		PIN,COTTER	1	
23	02000-00006		WASHER	1	
24	01183-08016		BOLT	2	

Fig.51 FOOT PEDAL(C-TYPE)

(F5035410)

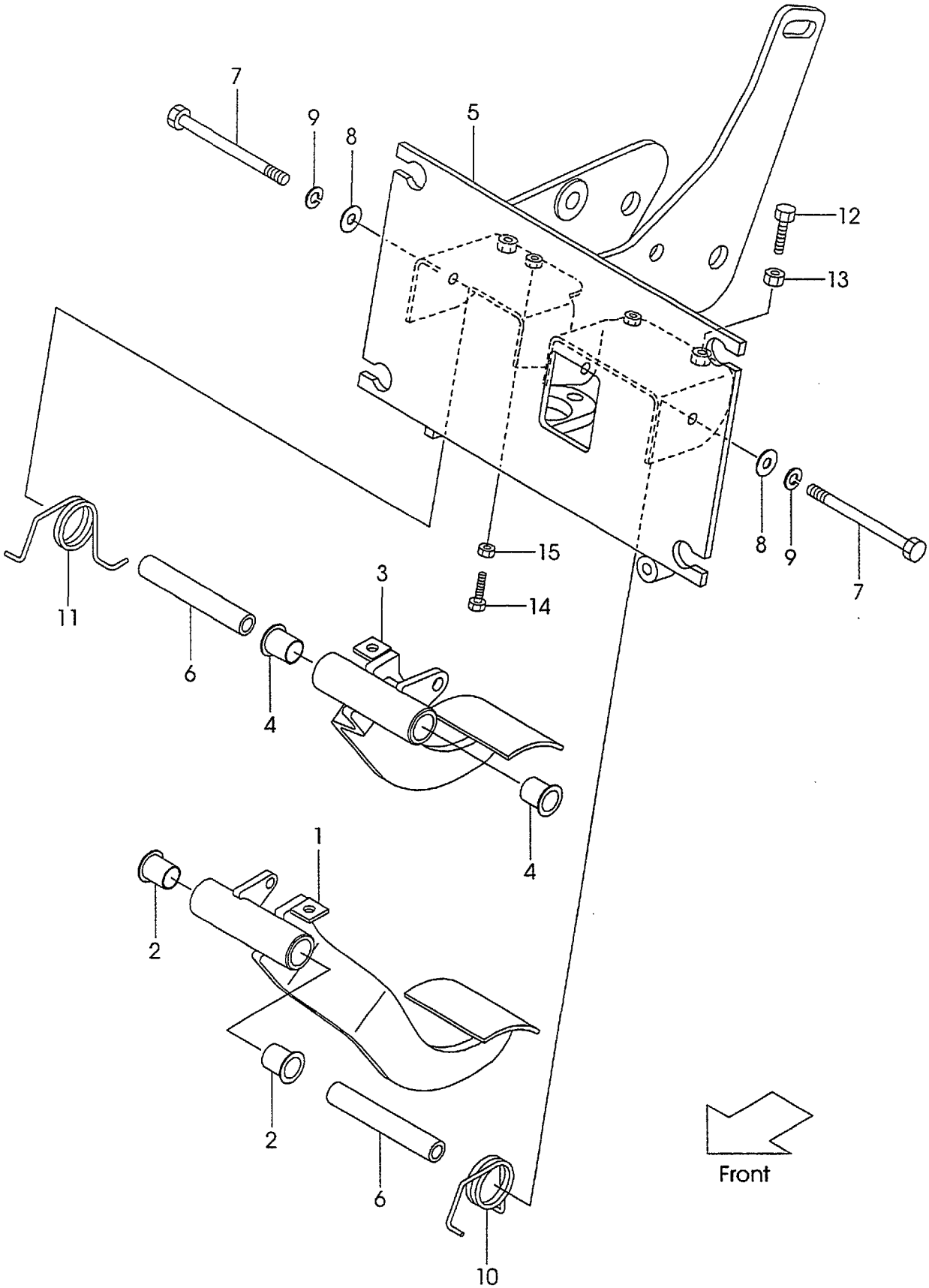

Fig.51

(F5035410)

A:FG30C6 C:FD30C6
B:FG30T6 D:FD30T6

Item No	Part No.	Mark	Description	Req'd	Remarks : Serial No.
A1	239A5-40051		PEDAL-ASSY,FOOT	1	A,C INC.1-15
A2	239A5-40071		PEDAL-ASSY,CLUTCH	1	A,C INC.1,2
1	239A5-40401		PEDAL,CLUTCH	1	A,C
2	239B5-42221		BUSHING	2	A,C
A3	239A5-40061		PEDAL-ASSY,BRAKE	1	A,C INC.3,4
3	239A5-40301		PEDAL,BRAKE	1	A,C
4	239B5-42221		BUSHING	2	A,C
5	239A5-40201		BRACKET,PEDAL	1	A,C
6	239B5-42231		SPACER	2	A,C
7	01103-10120		BOLT	2	A,C
8	02002-00010		WASHER	2	A,C
9	02011-00010		WASHER	2	A,C
10	239B5-42201		SPRING	1	A,C
11	239B5-42211		SPRING	1	A,C
12	01120-10035		BOLT	1	A,C
13	01402-00010		NUT	1	A,C
14	01120-08035		BOLT	1	A,C
15	01402-00008		NUT	1	A,C

Fig.52 FOOT PEDAL CYLINDER(C-TYPE)

(F5035420)

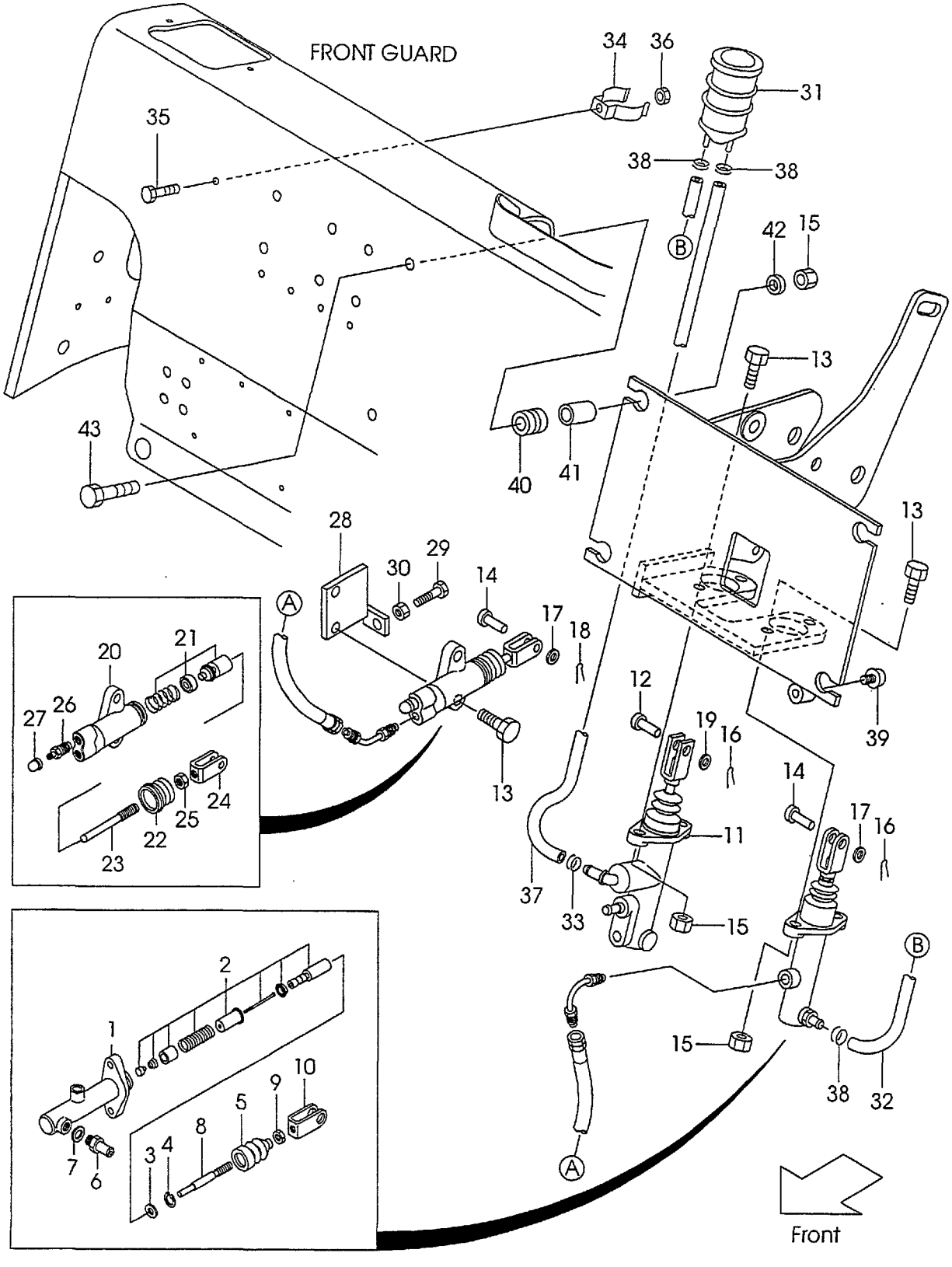

A:FG30C6 C:FD30C6
B:FG30T6 D:FD30T6

Fig.52
(F5035420)

Item No	Part No.	Mark	Description	Req'd	Remarks : Serial No.
A1	239A5-40501		CYL,MASTER	1	A,C
					INC.1-10
1	NO PART NO.	#	BODY,CYL	1	A,C
2	216G5-32221	*	PISTON	1	A,C
3	216G5-32311	*	PLATE	1	A,C
4	25595-42311	*	RING,SNAP	1	A,C
5	216G5-32321	*	BOOT	1	A,C
6	216G5-32331		UNION	1	A,C
7	216G5-32341		GASKET	1	A,C
8	NO PART NO.	#	ROD,PUSH	1	A,C
9	NO PART NO.	#	NUT	1	A,C
10	25595-42452		CLEVIS	1	A,C
11	239A5-40101		CYL,MASTER	1	A,C
12	02262-10030		PIN,CLEVIS	1	A,C
13	01184-10030		BOLT	6	A,C
14	02262-08025		PIN,CLEVIS	2	A,C
15	01400-00010		NUT	8	A,C
16	02200-32025		PIN,COTTER	1	A,C
17	02000-00008		WASHER	2	A,C
18	02200-02020		PIN	2	A,C
19	02000-00010		WASHER	1	A,C
A2	214A5-32312		CYL,RELEASE	1	A,C
					INC.20-27
20	NO PART NO.	#	BODY,CYL	1	A,C
21	NO PART NO.	#*	PISTON	1	A,C
22	NO PART NO.	#*	BOOT	1	A,C
A3	214A5-33052		ROD-ASSY,PUSH	1	A,C
					INC.23-25
23	214A5-33062		ROD,PUSH	1	A,C
24	25595-42452		CLEVIS	1	A,C
25	01402-00008		NUT	1	A,C
26	214A5-33031		VALVE,BLEEDER	1	A,C
27	214A5-33041		CAP,BLEEDER	1	A,C
28	214A5-32101		BRACKET	1	A,C
29	01100-10030		BOLT	1	A,C
30	01402-00010		NUT	1	A,C
31	216G5-42011		TANK,RESERVE	1	A,C
32	239A5-42411		HOSE	1	A,C
33	25595-42491		CLIP	1	A,C
34	224G5-42061		CLIP,TANK	1	A,C
35	239A5-42381		BOLT	1	A,C
36	01400-00006		NUT	1	A,C
37	239A5-42401		HOSE	1	A,C
38	25785-43091		CLIP	3	A,C
39	23456-42181		STOPPER	1	A,C
40	216G6-42031		RUBBER,MOUNT	4	A,C
41	216G7-32011		COLLAR	4	A,C
42	22252-32251		WASHER	4	A,C
43	216G6-43241		BOLT	4	A,C

Fig.52 FOOT PEDAL CYLINDER(C-TYPE)

(F5035420)

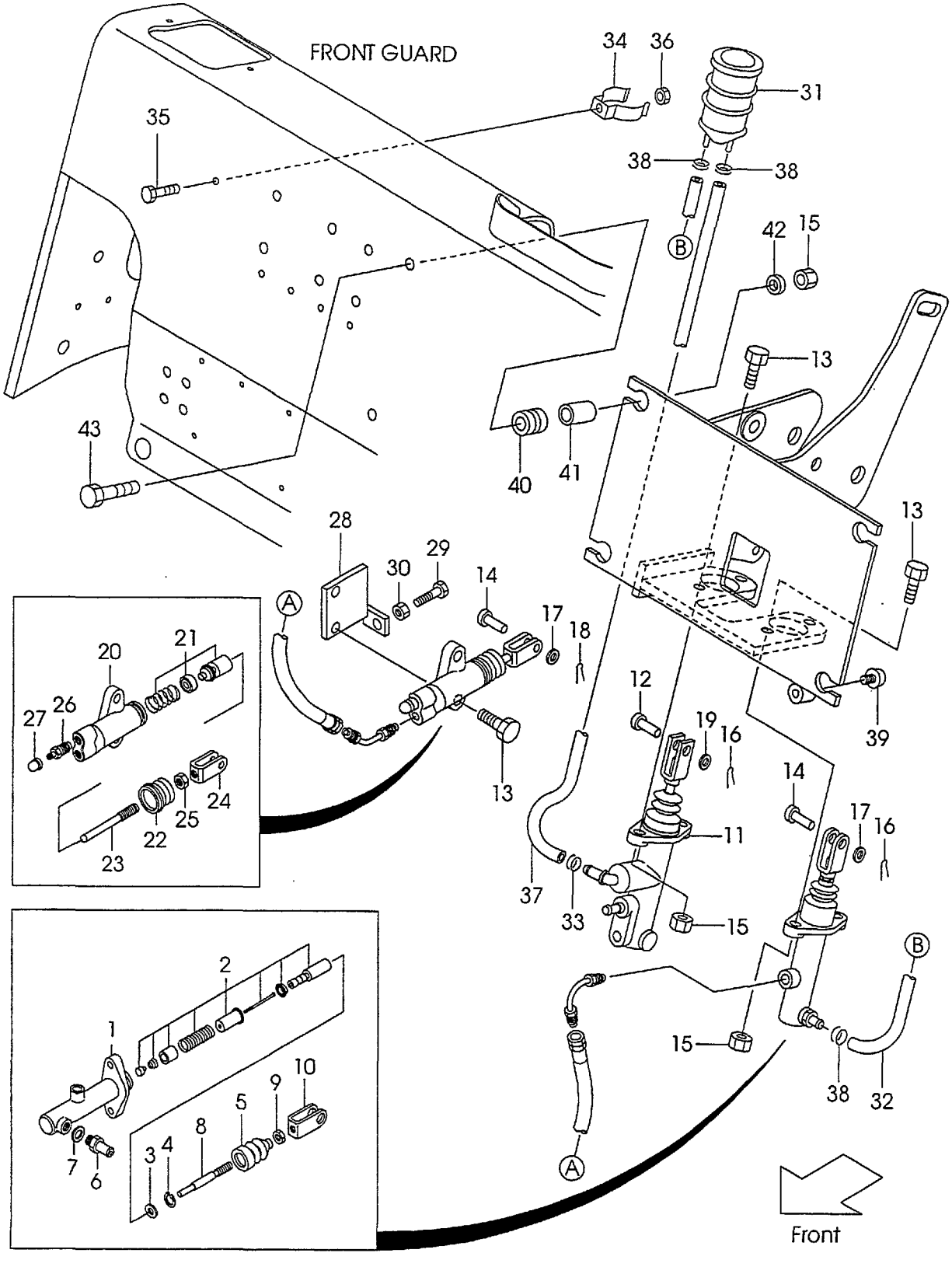

A:FG30C6 C:FD30C6
B:FG30T6 D:FD30T6

Fig.52
(F5035420)

Item No	Part No.	Mark	Description	Req'd	Remarks : Serial No.
K1	216G5-32201		KIT,REPAIR	1	A,C INC.2-5
K2	214A5-33012		KIT,REPAIR	1	A,C INC.21,22

Fig.53 BRAKE PIPE(C-TYPE)

(F5035430)

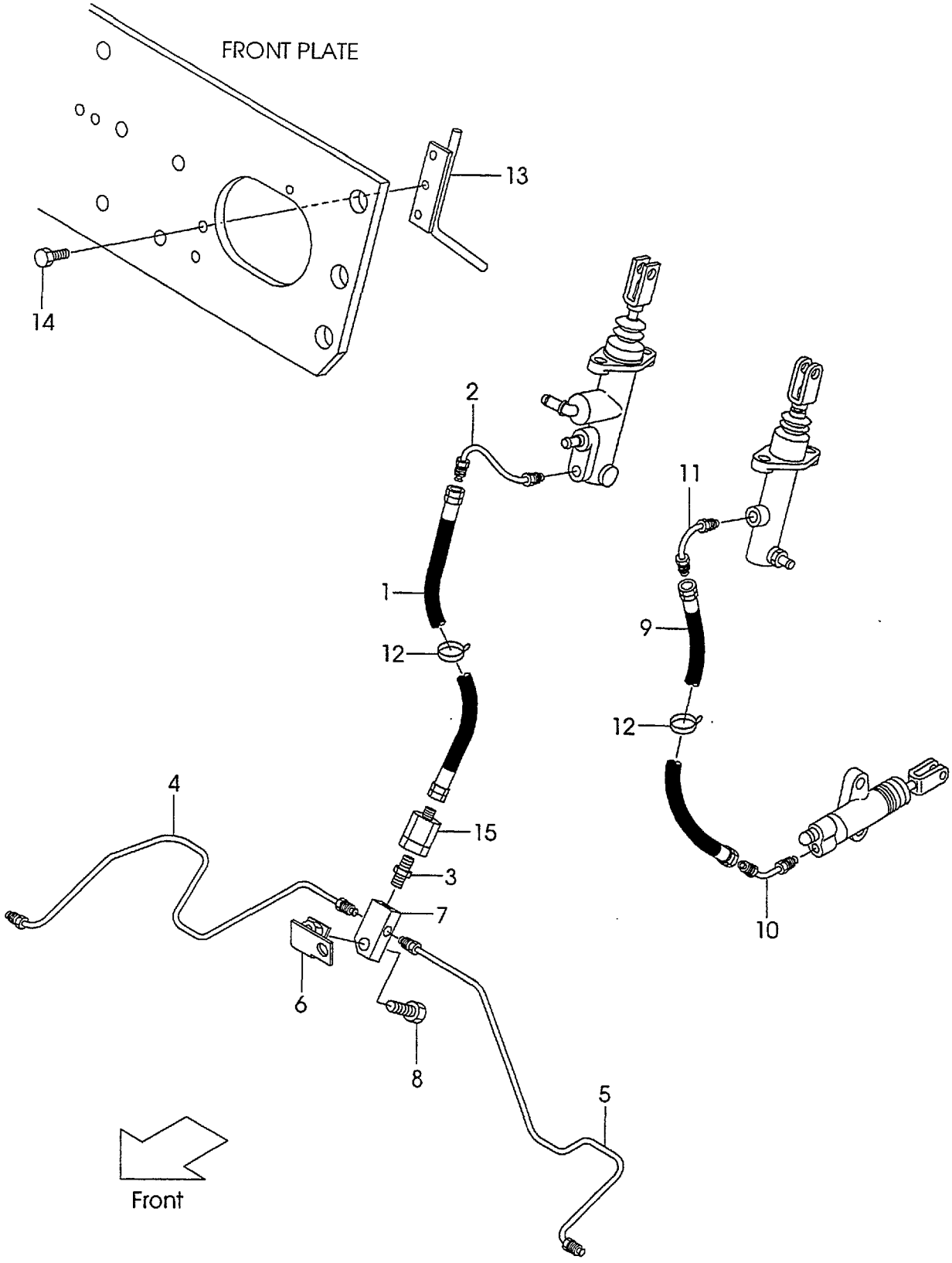

Fig.53
(F5035430)

A:FG30C6 C:FD30C6
B:FG30T6 D:FD30T6

Item No	Part No.	Mark	Description	Req'd	Remarks : Serial No.
1	218G5-42011		HOSE	1	A,C
2	218G5-42021		PIPE	1	A,C
3	239A5-42441		ADAPTER	1	A,C
4	239F5-42601		PIPE,BRAKE RH	1	A,C
5	239F5-42621		PIPE,BRAKE LH	1	A,C
6	239B5-42421		BRACKET,THREE-WAY	1	A,C
7	23455-42021		THREE-WAY	1	A,C
8	01184-10030		BOLT	1	A,C
9	239A5-42451		HOSE	1	A,C
10	239A5-42461		PIPE	1	A,C
11	239A5-42471		PIPE	1	A,C
12	04913-11200		BAND	2	A,C
13	239A5-42351		GUIDE	1	A,C
14	216H3-92291		BOLT	2	A,C
15	239B5-42701		VALVE,CHECK	1	A,C

Fig.54 FOOT PEDAL COVER
(F5035440)

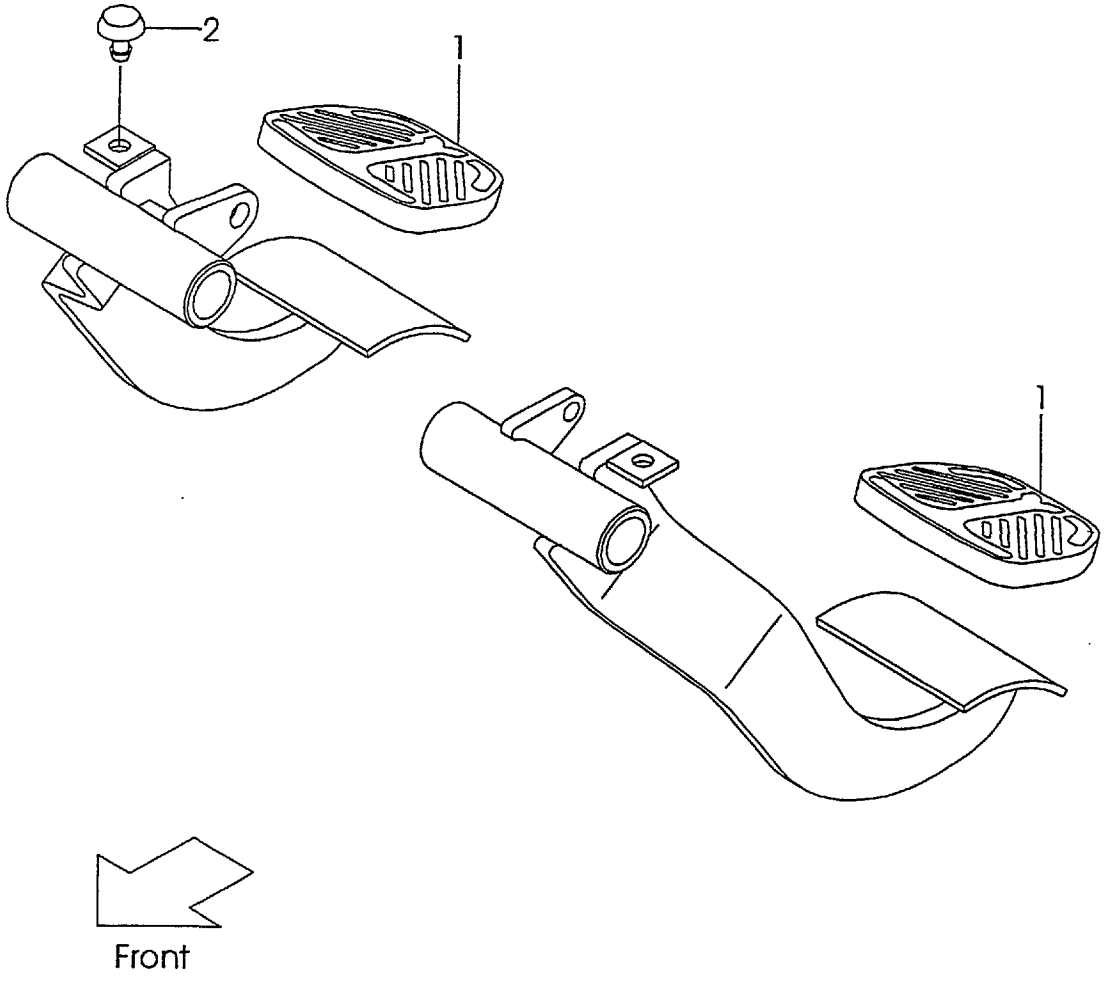

Fig.54

(F5035440)

A:FG30C6 C:FD30C6
B:FG30T6 D:FD30T6

Item No	Part No.	Mark	Description	Req'd	Remarks : Serial No.
1	239A5-42301		COVER,HEAD	2	
2	23235-40091		RUBBER	1	

Fig.55 FOOT PEDAL(T-TYPE)

(F50354A0)

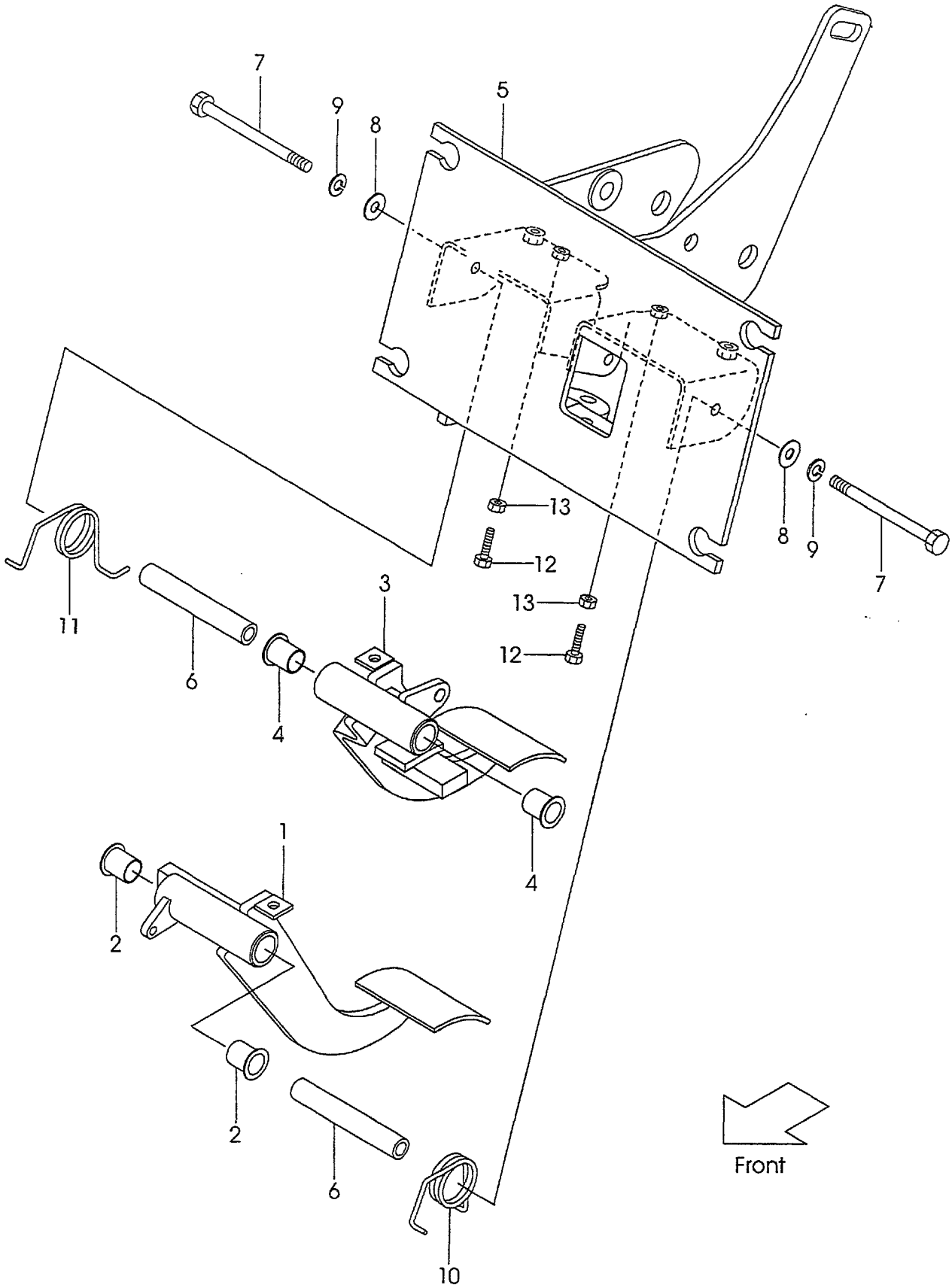

A:FG30C6 C:FD30C6
B:FG30T6 D:FD30T6

Fig.55
(F50354A0)

Item No	Part No.	Mark	Description	Req'd	Remarks : Serial No.
A1	239B5-40101		PEDAL-ASSY,FOOT	1	B,D INC.1-13
A2	239B5-40031		PEDAL-ASSY,INCHING	1	B,D INC.1,2
1	239B5-40401		PEDAL,INCHING	1	B,D
2	239B5-42221		BUSHING	2	B,D
A3	239B5-40021		PEDAL-ASSY,BRAKE	1	B,D INC.3,4
3	239B5-40301		PEDAL,BRAKE	1	B,D
4	239B5-42221		BUSHING	2	B,D
5	239B5-40201		BRACKET	1	B,D
6	239B5-42231		SPACER	2	B,D
7	01103-10120		BOLT	2	B,D
8	02002-00010		WASHER	2	B,D
9	02011-00010		WASHER	2	B,D
10	239B5-42201		SPRING	1	B,D
11	239B5-42211		SPRING	1	B,D
12	01120-08035		BOLT	2	B,D
13	01402-00008		NUT	2	B,D

Fig.56 FOOT PEDAL CYLINDER(T-TYPE)
(F50354B0)

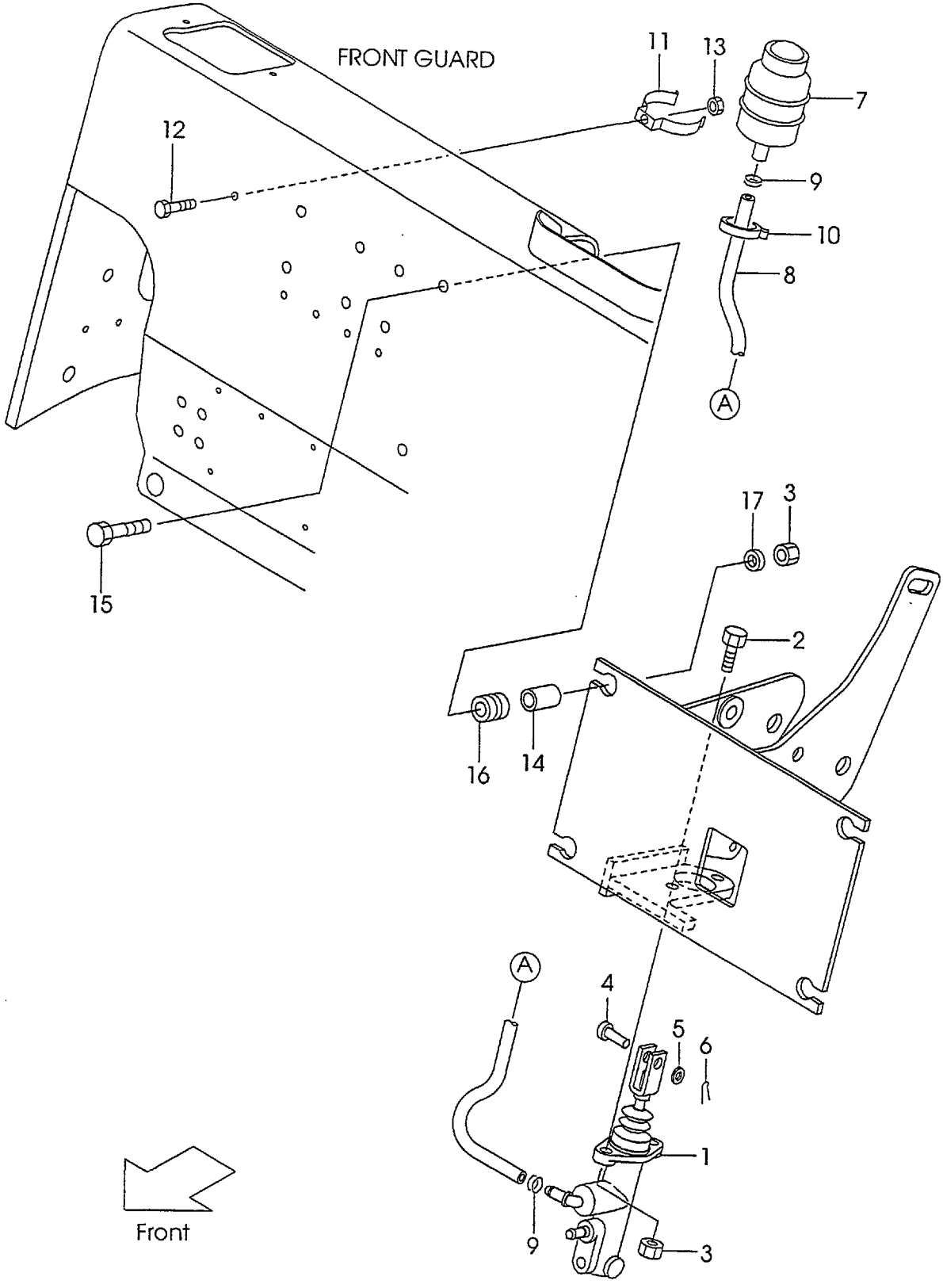

A:FG30C6 C:FD30C6
B:FG30T6 D:FD30T6

Fig.56
(F50354B0)

Item No	Part No.	Mark	Description	Req'd	Remarks : Serial No.
1	239A5-40101		CYL,MASTER	1	B,D
2	01184-10030		BOLT	2	B,D
3	01400-00010		NUT	6	B,D
4	02262-10030		PIN,CLEVIS	1	B,D
5	02000-00010		WASHER	1	B,D
6	02200-32025		PIN,COTTER	1	B,D
7	23775-42101		TANK,RESERVE	1	B,D
8	22655-42591		HOSE	1	B,D
9	25595-42491		CLIP	2	B,D
10	04913-11200		BAND	2	B,D
11	224G5-42061		CLIP,TANK	1	B,D
12	239A5-42381		BOLT	1	B,D
13	01400-00006		NUT	1	B,D
14	216G7-32011		COLLAR	4	B,D
15	216G6-43241		BOLT	4	B,D
16	216G6-42031		RUBBER	4	B,D
17	22252-32251		WASHER	4	B,D

Fig.57 FOOT PEDAL LINK(T-TYPE)
(F50354C0)

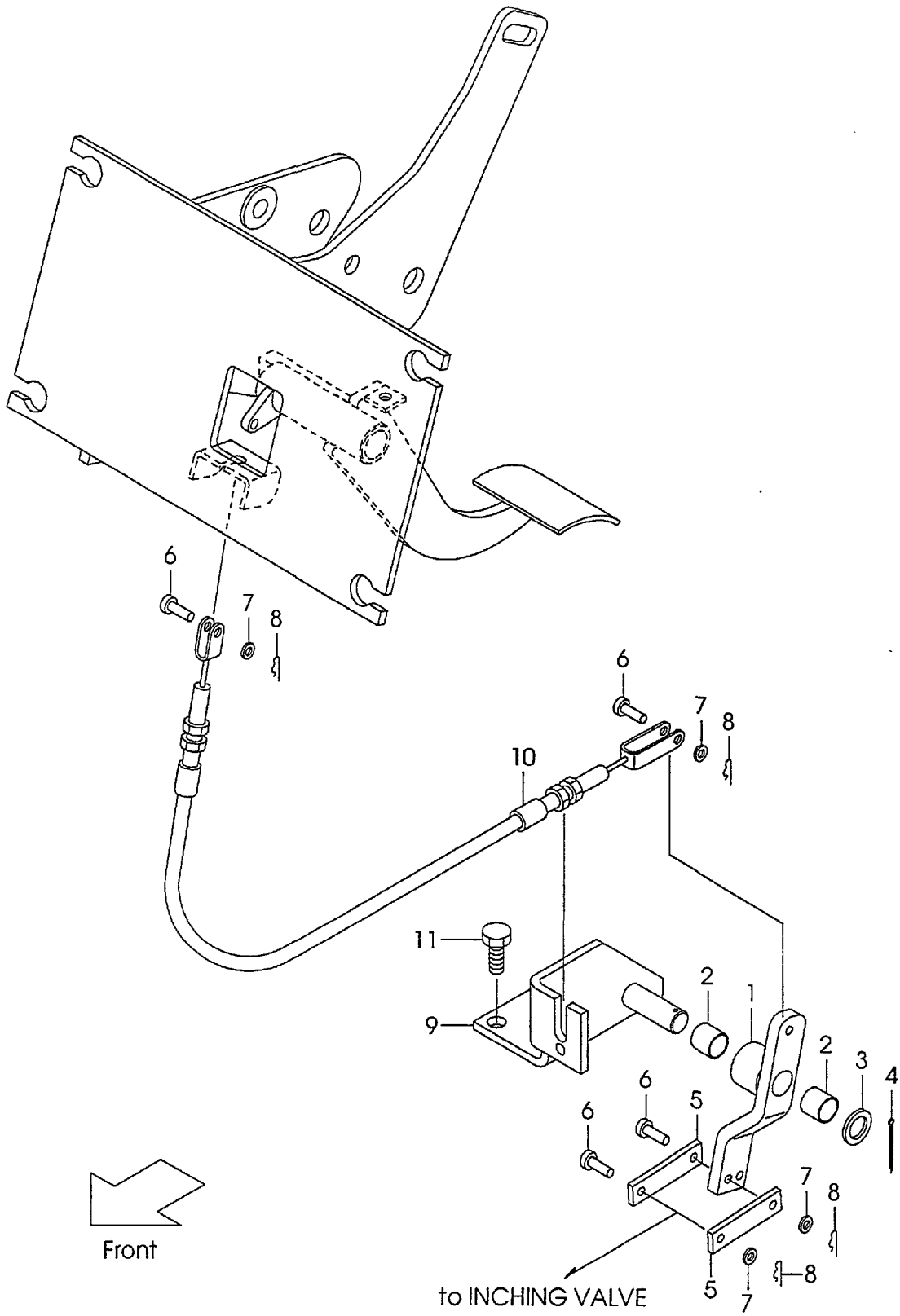

A:FG30C6 C:FD30C6
B:FG30T6 D:FD30T6

Fig.57
(F50354C0)

Item No	Part No.	Mark	Description	Req'd	Remarks : Serial No.
A1	218H5-40521		LINK-ASSY	1	B,D
					INC.1,2
1	218H5-40511		LINK	1	B,D
2	23647-40121		BUSHING	2	B,D
3	02000-00016		WASHER	1	B,D
4	02200-04025		PIN,COTTER	1	B,D
5	218H5-42521		PLATE	2	B,D
6	02262-06025		PIN,CLEVIS	4	B,D
7	02000-00006		WASHER	4	B,D
8	216G5-22081		PIN,SNAP	4	B,D
9	239G5-40501		BRACKET	1	B,D
10	239B5-42501		CABLE,INCHING	1	B,D
11	01184-10020		BOLT	2	B,D

Fig.58 BRAKE PIPE(T-TYPE)

(F50354D0)

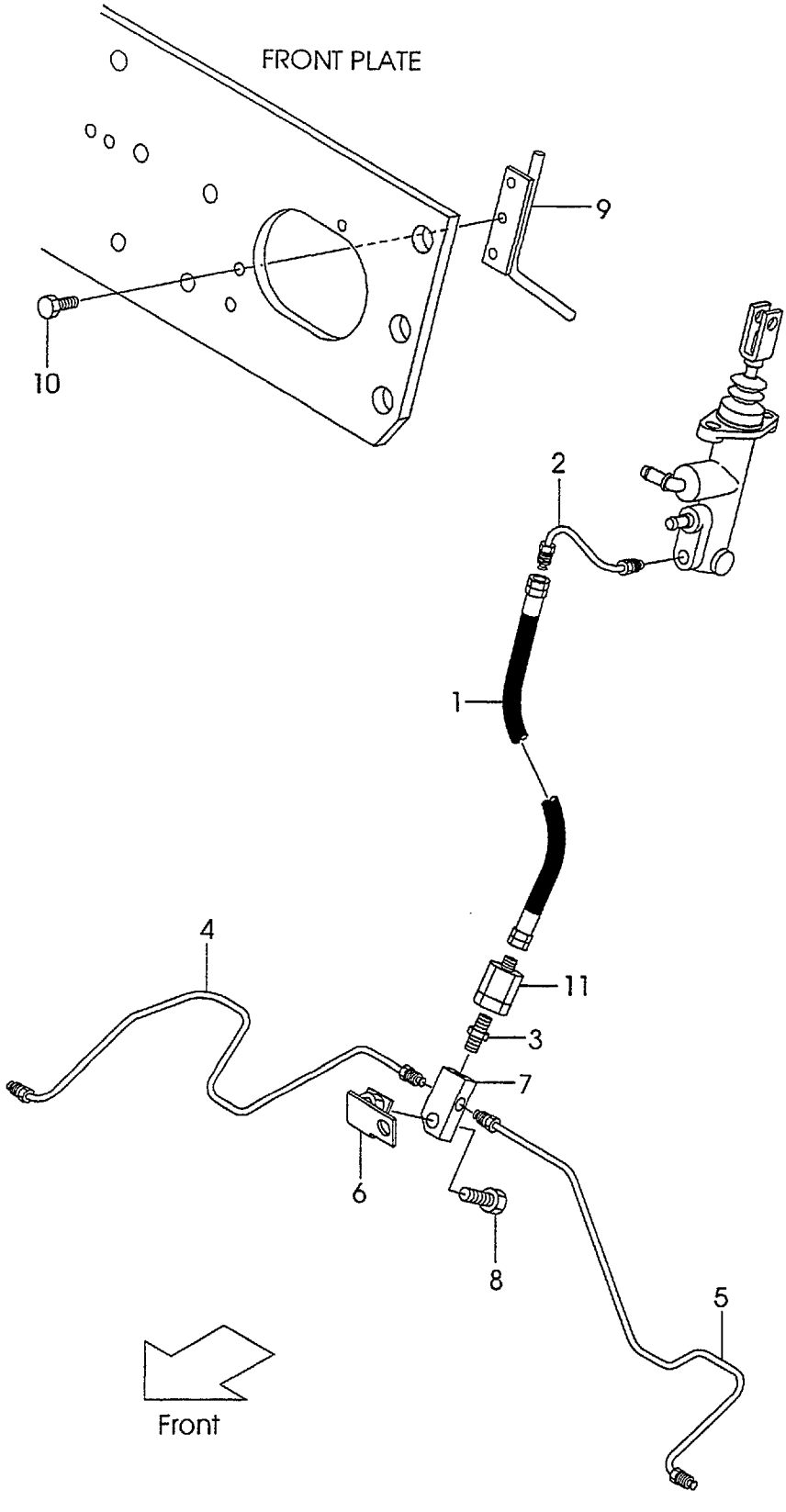

Fig.58
(F50354D0)

A:FG30C6 C:FD30C6
B:FG30T6 D:FD30T6

Item No	Part No.	Mark	Description	Req'd	Remarks : Serial No.
1	218G5-42011		HOSE	1	B,D
2	218G5-42021		PIPE	1	B,D
3	239A5-42441		ADAPTER	1	B,D
4	239F5-42601		PIPE,BRAKE RH	1	B,D
5	239F5-42621		PIPE,BRAKE LH	1	B,D
6	239B5-42421		BRACKET,THREE-WAY	1	B,D
7	23455-42021		THREE-WAY	1	B,D
8	01184-10030		BOLT	1	B,D
9	239A5-42351		GUIDE	1	B,D
10	216H3-92291		BOLT	2	B,D
11	239B5-42701		VALVE,CHECK	1	B,D

Fig.59 BRAKE LEVER

(F5035510)

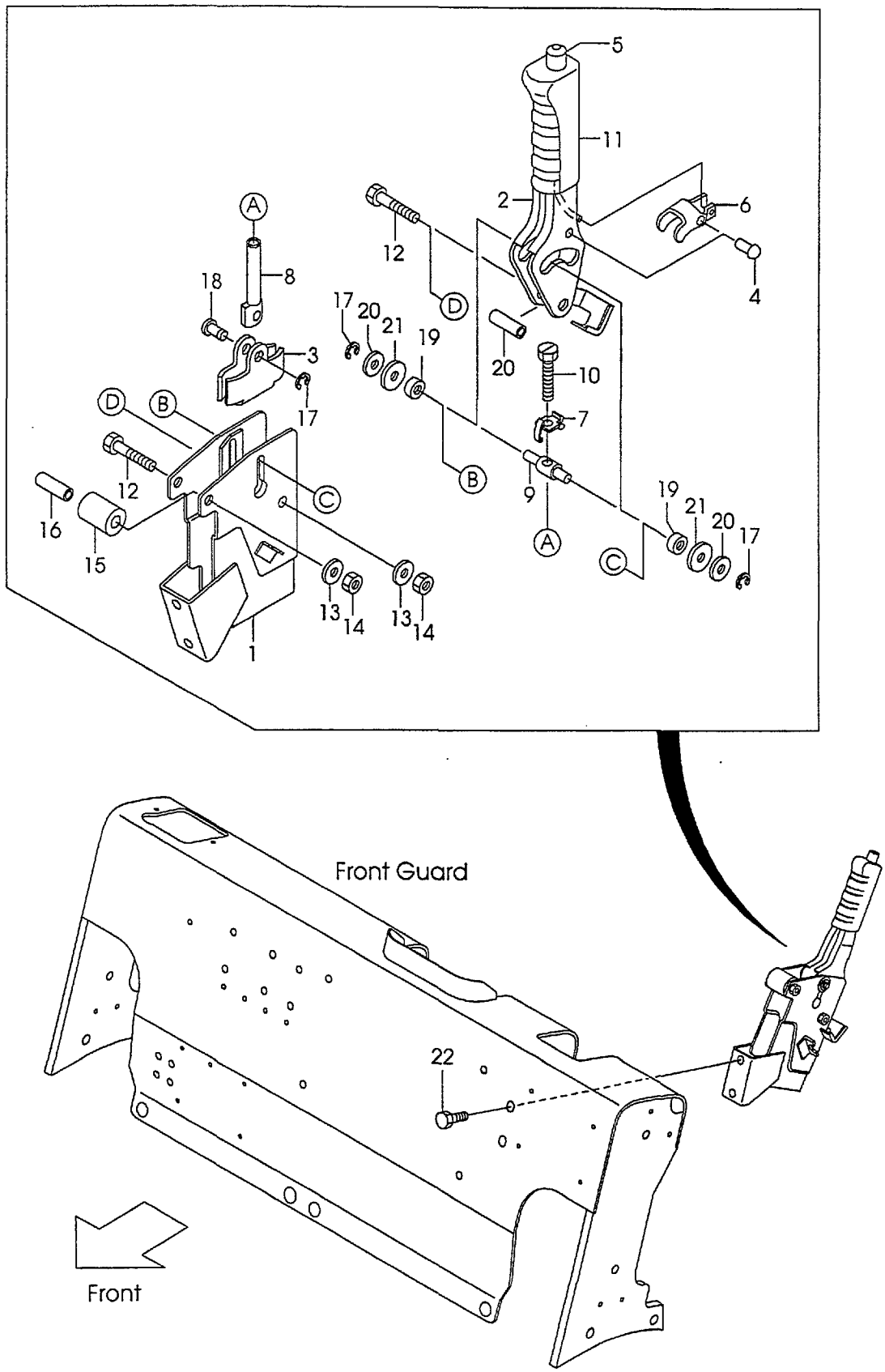

A:FG30C6 C:FD30C6
B:FG30T6 D:FD30T6

Fig.59
(F5035510)

Item No	Part No.	Mark	Description	Req'd	Remarks : Serial No.
A1	239A5-50101		LEVER-ASSY,BRAKE	1	INC.1-21
1	NO PART NO.		BRACKET,BRAKE-LEVER	1	
2	NO PART NO.		LEVER	1	
3	27415-52151		BRACKET	1	
4	230C5-55021		PIN	1	
5	230C5-55031		ROD,RELEASE	1	
6	230C5-55041		PLATE,LOCK	1	
7	230C5-55051		PLATE,TENSION	1	
8	230C5-55061		ROD,ADJUST	1	
9	230C5-55071		PIN,TRUNION	1	
10	230C5-55081		BOLT	1	
11	NO PART NO.		GRIP	1	
12	01100-08050		BOLT	2	
13	02010-00008		WASHER	2	
14	01400-00008		NUT	2	
15	222A5-52111		RUBBER,STOPPER	1	
16	230C5-55101		COLLAR	2	
17	214A5-52131		E-RING	3	
18	230C5-55111		PIN	1	
19	230C5-55121		ROLLER,CAM	2	
20	214A5-52121		WASHER	2	
21	214A5-52241		WASHER	2	
22	216G6-43231		BOLT	2	

Fig.60 FRAME
(F5036110)

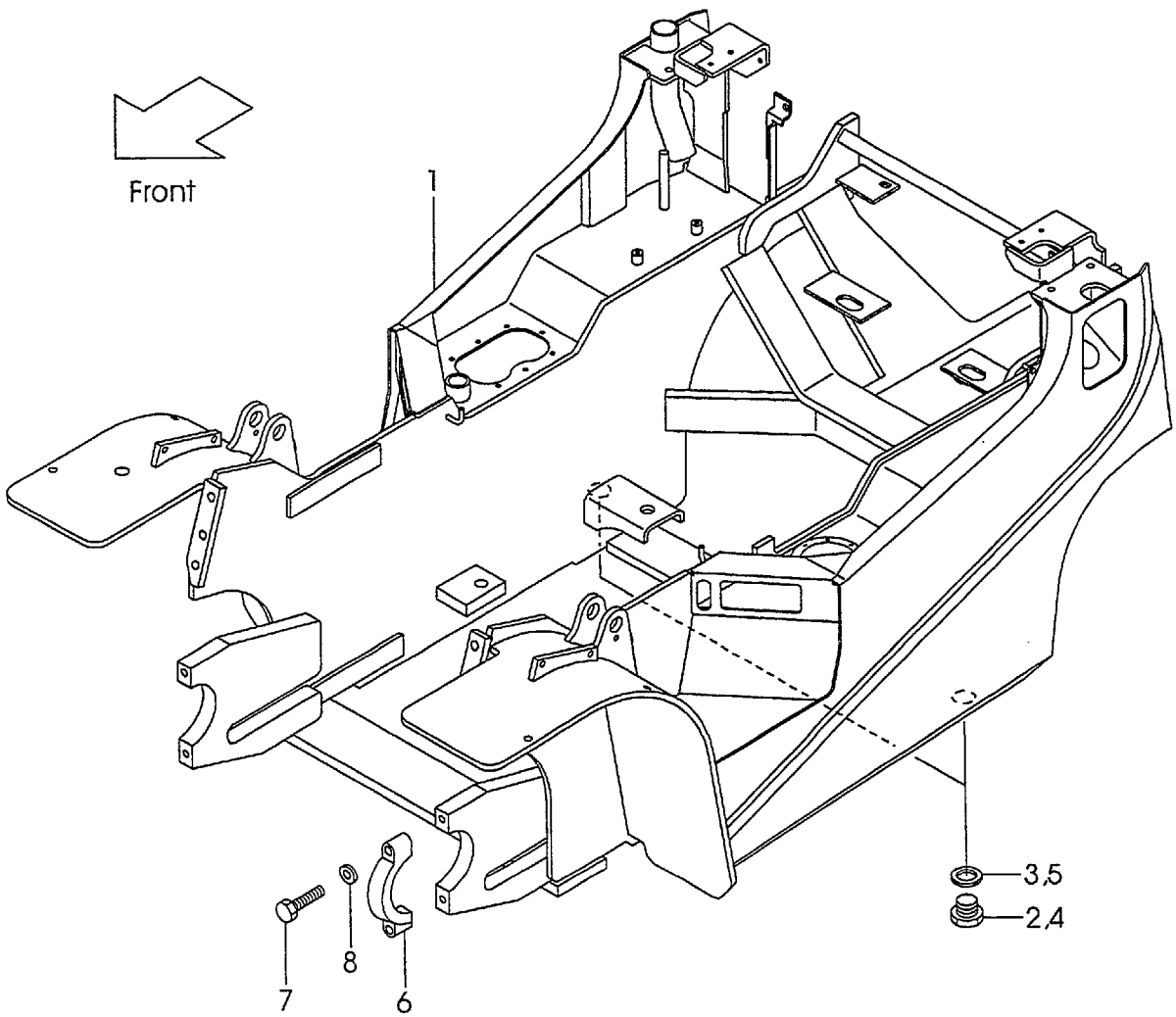

A:FG30C6 C:FD30C6
B:FG30T6 D:FD30T6

Item No	Part No.	Mark	Description	Req'd	Remarks : Serial No.
1	NO PART NO.	#	FRAME	1	INC.2-5
2	21237-52051		PLUG,OIL-TANK	1	
3	21237-52062		PACKING	1	
4	21237-52051		PLUG,FUEL-TANK	1	
5	21237-52062		PACKING	1	
6	277P8-32701		CAP	2	
7	01100-16065		BOLT	4	
8	02010-00016		WASHER	4	

Fig.61 OIL TANK
(F50361A0)

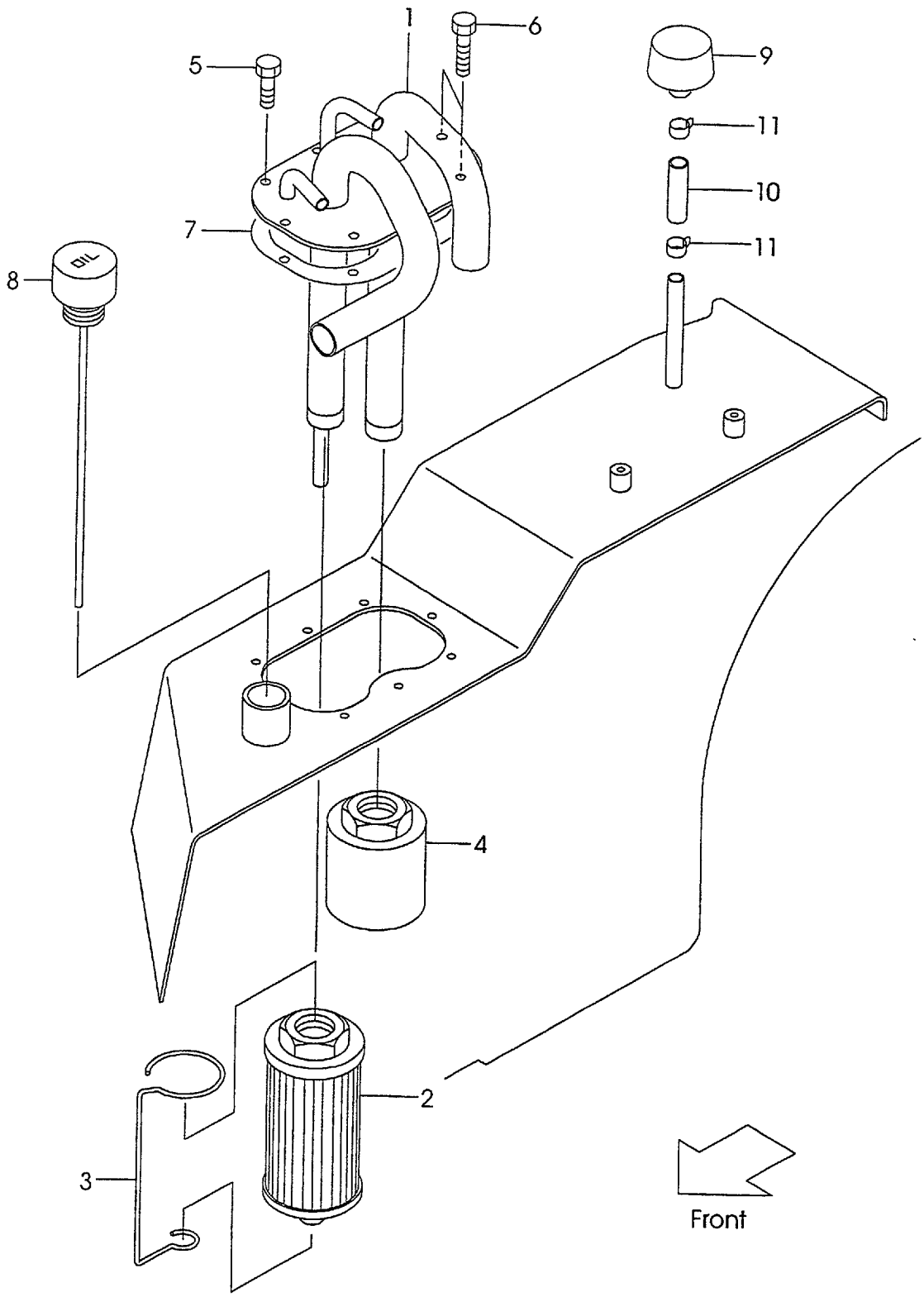

A:FG30C6 C:FD30C6
B:FG30T6 D:FD30T6

Fig.61
(F50361A0)

Item No	Part No.	Mark	Description	Req'd	Remarks : Serial No.
A1	239A7-50201		PIPE-ASSY,SUCTION	1	INC.1-4
1	239A7-52001		PIPE,SUCTION	1	
A2	271A7-52301		FILTER-ASSY	1	INC.2,3
2	214A7-52081		FILTER,RETURN	1	
3	234A7-52301		WIRE	1	
4	216G7-52051		FILTER,SUCTION	1	
5	229F2-22151		BOLT	6	
6	229F2-22161		BOLT	2	
7	216G2-22202		PACKING	1	
8	234A7-52101		CAP,OIL	1	
9	216G7-52201		CAP,BREATHER	1	
10	04710-04005		HOSE	1	
11	04914-00019		CLIP	2	

Fig.62 FUEL TANK
(F50361B0)

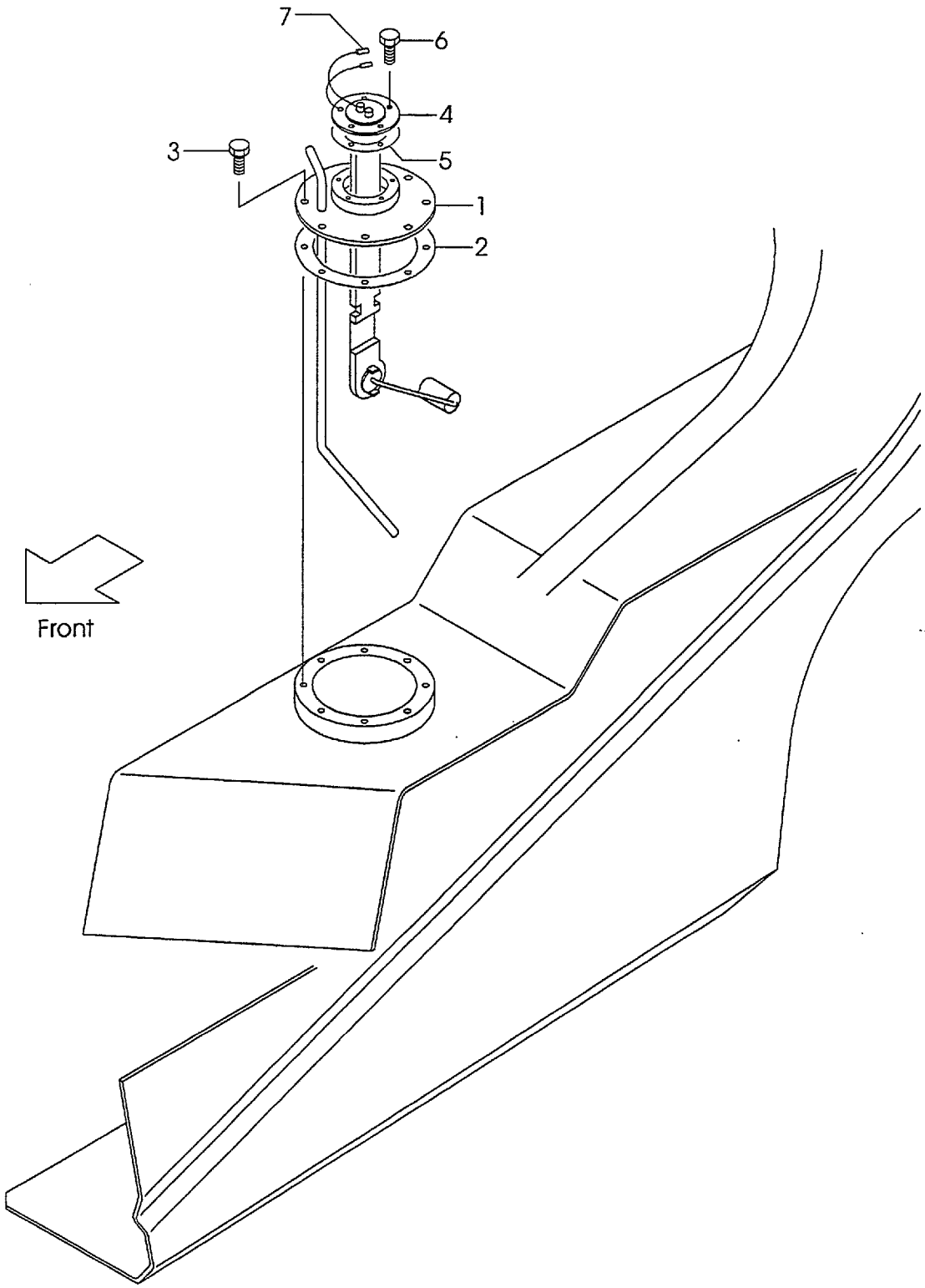

Fig.62
(F50361B0)

A:FG30C6 C:FD30C6
B:FG30T6 D:FD30T6

Item No	Part No.	Mark	Description	Req'd	Remarks : Serial No.
1	237A2-22101		PLATE,TOP	1	A,B
-	239A2-22101		PLATE,TOP	1	C,D
2	272E7-52022		GASKET	1	
3	01183-06016		BOLT	8	
4	222A2-22061		GAUGE,FUEL	1	
5	229F2-22071		GASKET	1	
6	01183-05010		BOLT	5	
7	25592-42121		WIRE	1	

Fig.63 BALANCE WEIGHT
(F5036310)

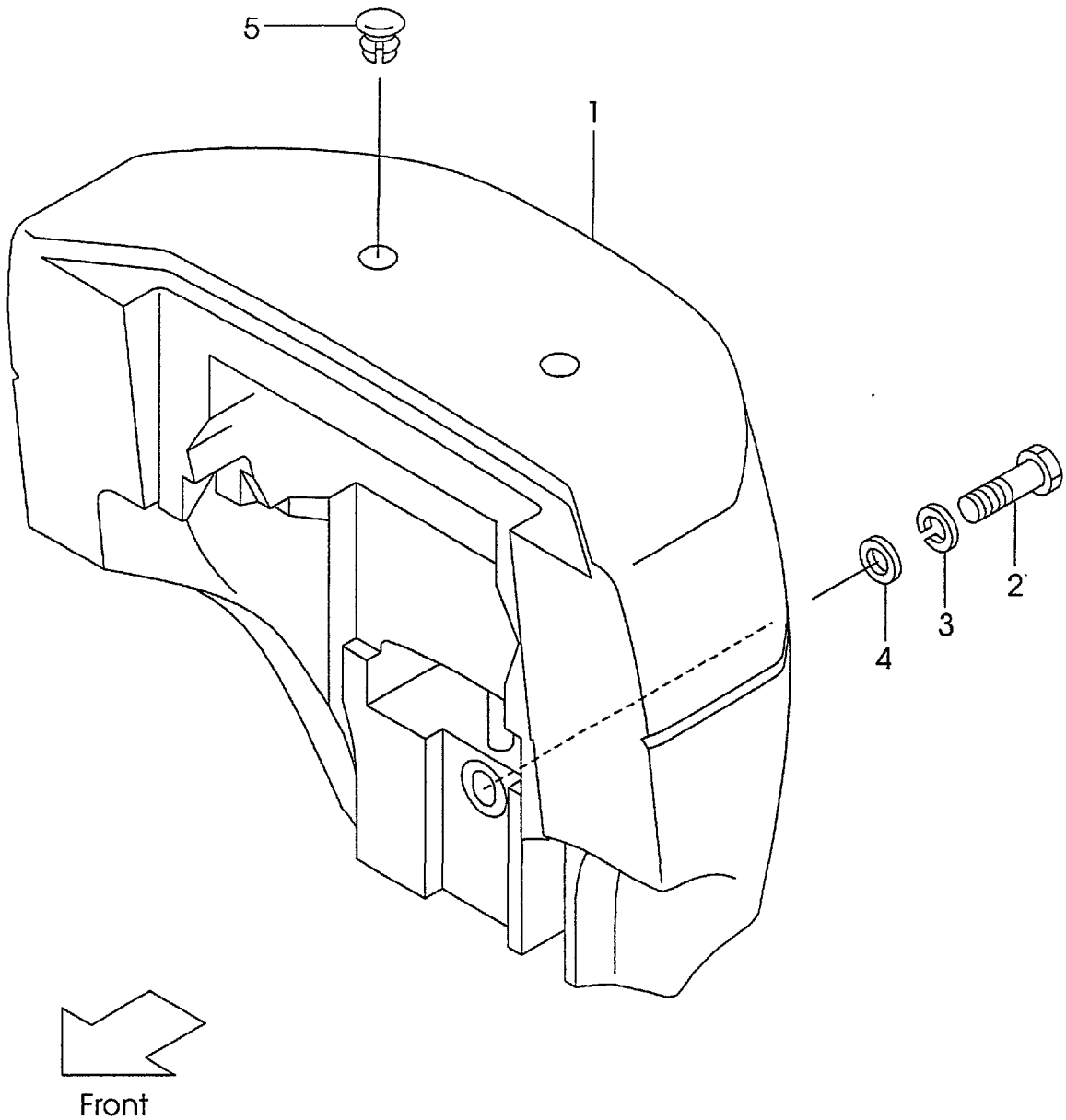

Fig.63
(F5036310)

A:FG30C6 C:FD30C6
B:FG30T6 D:FD30T6

Item No	Part No.	Mark	Description	Req'd	Remarks : Serial No.
1	NO PART NO.	#	WEIGHT,BALANCE	1	
2	01110-36200		BOLT	1	
3	02010-00036		WASHER	1	
4	25786-32031		WASHER	1	
5	216G6-32101		CAP	2	

Fig.64 FRONT GUARD

(F5036410)

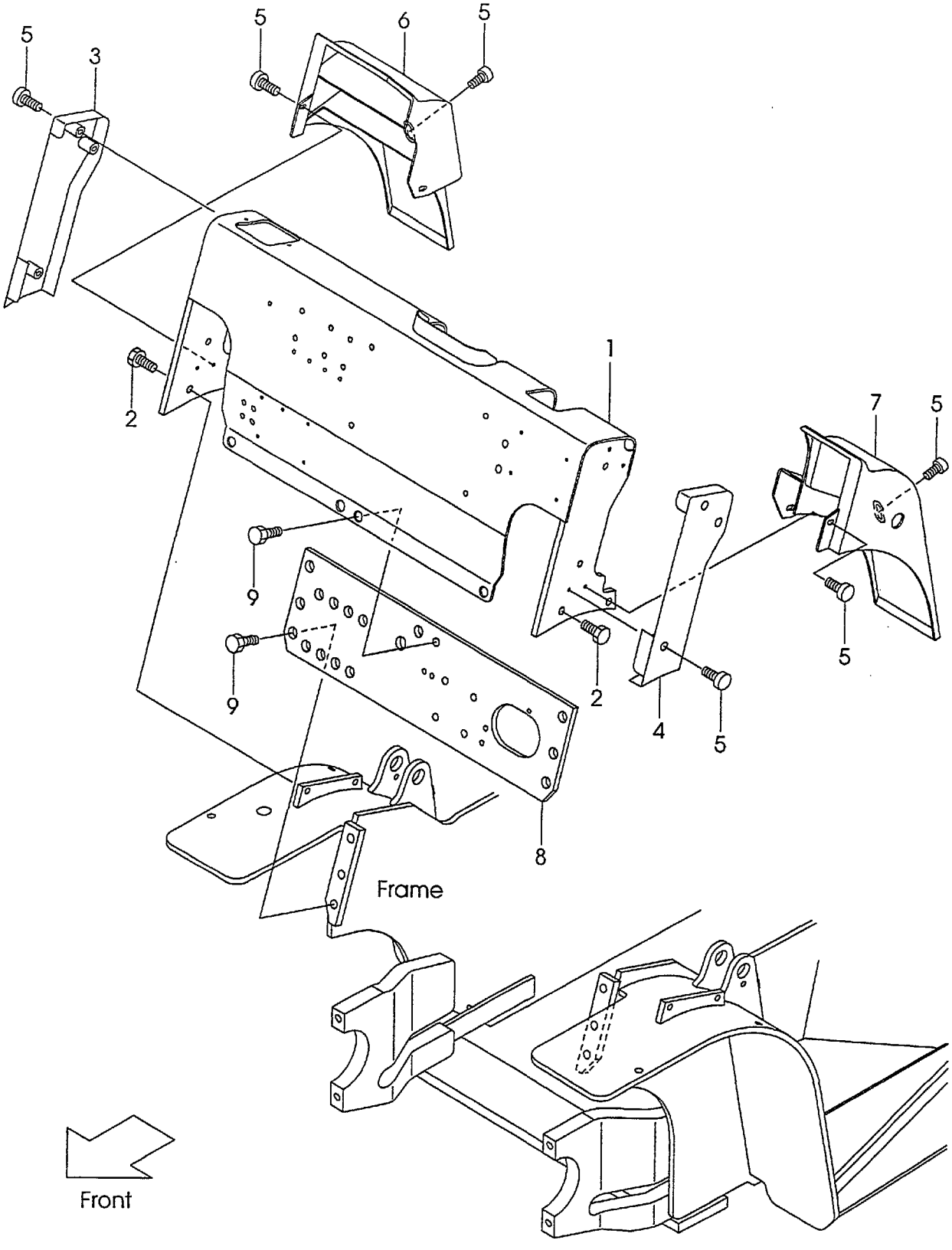

A:FG30C6 C:FD30C6
B:FG30T6 D:FD30T6

Fig.64
(F5036410)

Item No	Part No.	Mark	Description	Req'd	Remarks : Serial No.
1	239A6-40201		GUARD,FRONT	1	
2	01186-12025		BOLT	4	
3	239A6-43001		COVER,SIDE RH	1	
4	239A6-43011		COVER,SIDE LH	1	
5	214A6-42252		SCREW	10	
6	239A6-43101		COVER,TILT-CYL RH	1	
7	239A6-43111		COVER,TILT-CYL LH	1	
8	239A6-42001		PLATE,FRONT	1	
9	216G6-43561		BOLT,FLANGE	7	

Fig.65 BONNET
(F5036420)

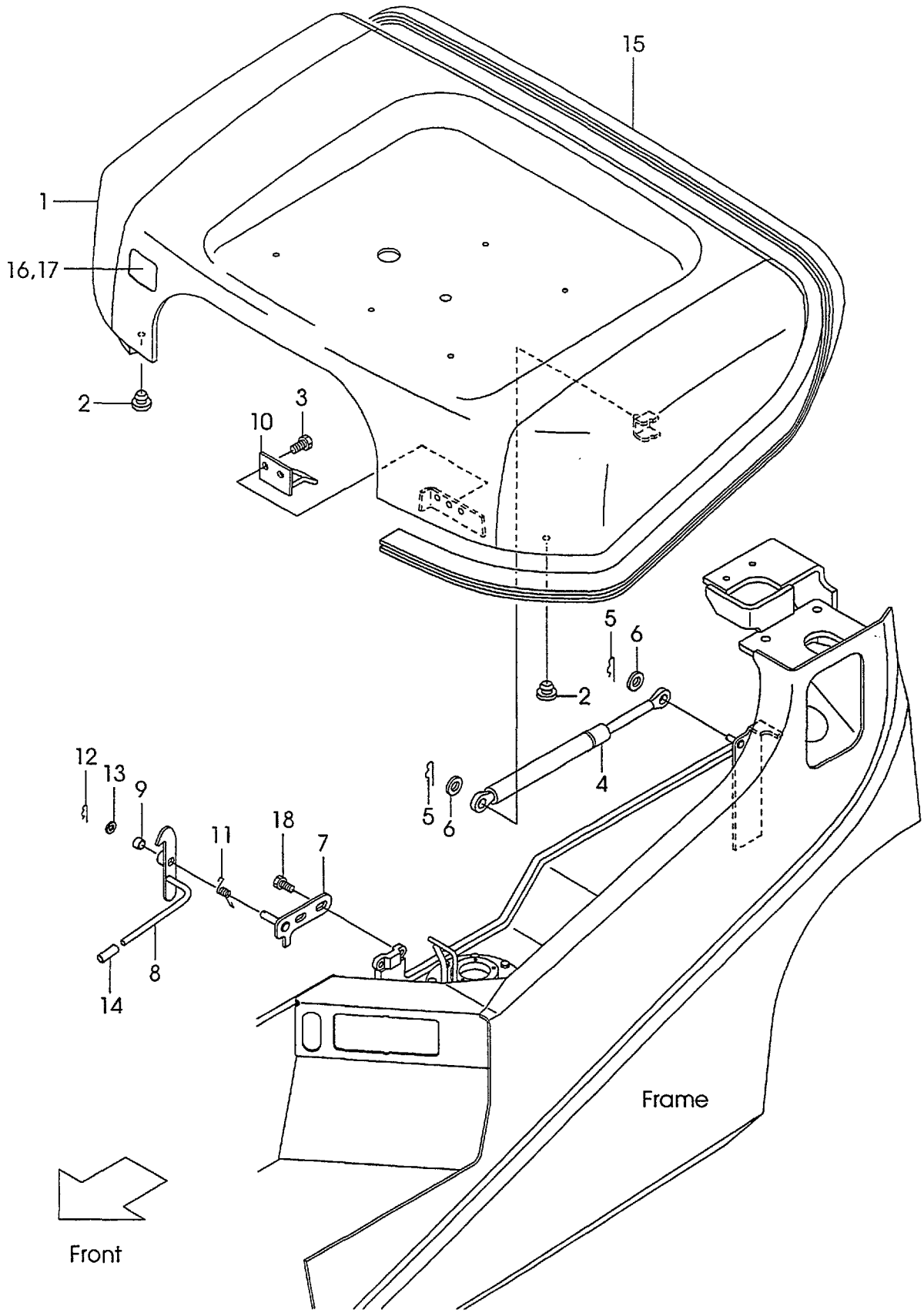

Fig.65
(F5036420)

A:FG30C6 C:FD30C6
B:FG30T6 D:FD30T6

Item No	Part No.	Mark	Description	Req'd	Remarks : Serial No.
1	209P6-40301		BONNET	1	
2	23456-42181		STOPPER,BONNET	2	
3	01183-08016		BOLT	2	
4	535C2-60401		SPRING,GAS	1	
5	216H3-92171		PIN,SNAP	2	
6	02000-00008		WASHER	2	
A1	218G6-40521		CATCH-ASSY,BONNET	1	INC.7-13
7	218G6-42451		BRACKET	1	
8	218G6-42471		LATCH	1	
9	23655-22101		BUSHING	1	
10	216G6-42451		HOOK	1	
11	216G6-42481		SPRING	1	
12	216H5-42141		PIN,SNAP	1	
13	02000-00010		WASHER	1	
14	216G6-52291		CAP	1	
15	209P6-42841		SEAL,RUBBER	1	
16	209P6-40401		INSULATOR	1	
17	216G6-42541		CLIP	10	
18	01185-08020		BOLT	2	

Fig.66 RADIATOR COVER
(F5036430)

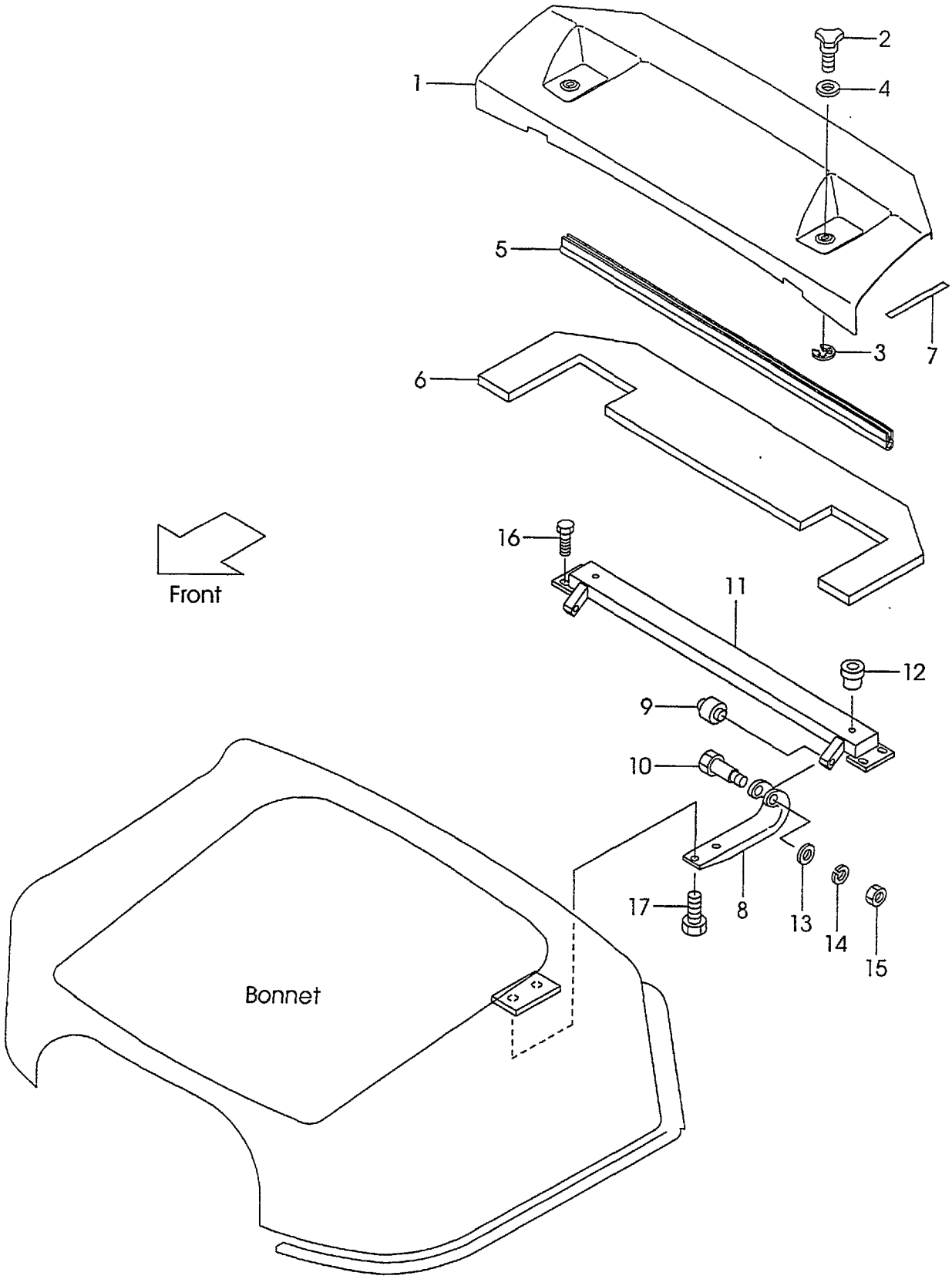

A:FG30C6 C:FD30C6
B:FG30T6 D:FD30T6

Fig.66
(F5036430)

Item No	Part No.	Mark	Description	Req'd	Remarks : Serial No.
1	239A6-40301		COVER,RADIATOR	1	
2	222A6-42451		BOLT,KNOB	2	
3	222A6-42461		E-RING	2	
4	02000-00008		WASHER	2	
5	214A6-42121		SEAL,RUBBER	1	
6	239A6-42291		RUBBER	1	
7	234A6-43121		RUBBER	2	
A1	218G6-40401		HINGE-ASSY	1	INC.8-15
8	216G6-42911		HINGE	2	
9	216G6-43601		BUSHING	2	
10	216G6-42931		BOLT	2	
11	218G6-42301		BRACKET	1	
12	514A5-12011		RIVET	2	
13	02000-00006		WASHER	2	
14	02010-00006		WASHER	2	
15	01400-00006		NUT	2	
16	01186-10020		BOLT	4	
17	01183-08016		BOLT	4	

Fig.67 FLOOR BOARD

(F5036440)

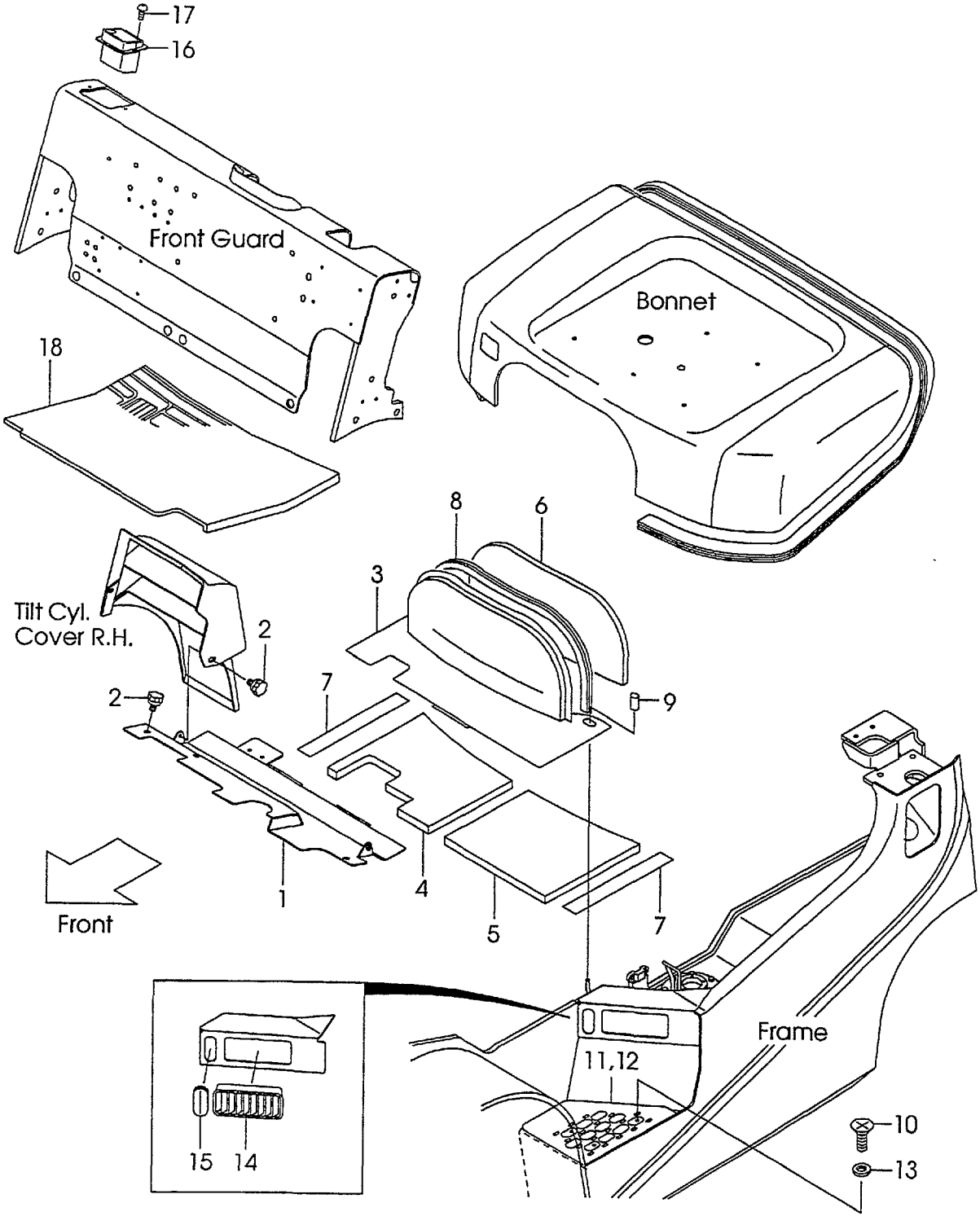

Fig.67
(F5036440)

A:FG30C6 C:FD30C6
B:FG30T6 D:FD30T6

Item No	Part No.	Mark	Description	Req'd	Remarks : Serial No.
1	239A6-50112		BOARD,FLLOR FRONT	1	
2	256C5-12671		BOLT,KNOB	4	
3	239A6-50302		BOARD,FLLOR REAR	1	A,C
-	239B6-50302		BOARD,FLLOR REAR	1	B,D
4	239A6-52131		INSULATOR,REAR RH	1	
5	239A6-52141		INSULATOR,REAR LH	1	
6	216G6-52231		INSULATOR,REAR	1	
7	239A6-52171		RUBBER	2	
8	216G6-52271		EDGING	1	
9	216G6-52291		CAP	2	
10	214A6-42911		SCREW	6	
11	234A6-42042		STEP,NON-SKID RH	1	
12	234A6-42072		STEP,NON-SKID LH	1	
13	02000-20010		WASHER	6	
14	230C1-02041		COVER,INTAKE	2	
15	209P7-42161		BOOTS	1	
16	216G9-32001		TRAY	1	
17	214A6-42252		SCREW	2	
18	239A6-52221		MAT,FLOOR	1	A,C
-	239B6-52221		MAT,FLOOR	1	B,D

Fig.68 SEAT

(F5036810)

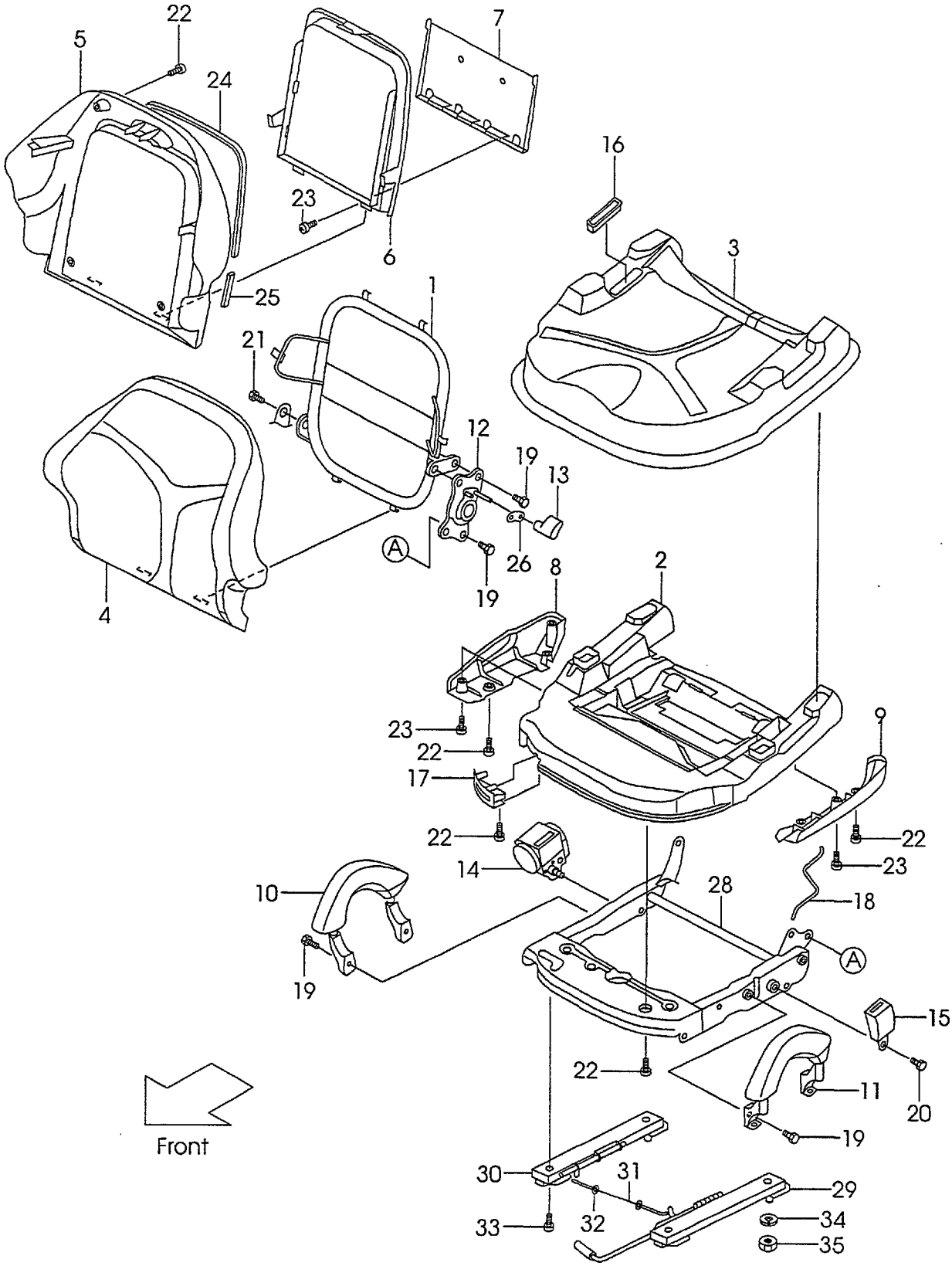

A:FG30C6 C:FD30C6
B:FG30T6 D:FD30T6

Fig.68
(F5036810)

Item No	Part No.	Mark	Description	Req'd	Remarks : Serial No.
A1	234A6-81001		SEAT-ASSY	1	INC.1-33
1	234A6-82001		FRAME	1	
2	234A6-82011		PLATE,BOTTOM	1	
3	234A6-82021		PAD,CUSHION	1	
4	234A6-82031		PAD,BACK	1	
5	234A6-82041		COVER	1	
6	234A6-82051		LID	1	
7	234A6-82061		RACK	1	
8	234A6-82071		COVER,RH	1	
9	234A6-82081		COVER,LH	1	
10	234A6-82091		GRIP,RH	1	
11	234A6-82101		GRIP,LH	1	
12	234A6-82111		DVC	1	
13	234A6-82121		KNOB	1	
14	234A6-82131		BELT	1	
15	234A6-82141		BACKLE	1	
16	234A6-82151		COVER,BELT	1	
17	234A6-82161		COVER,ADJUSTER	1	
18	234A6-82171		SPRING	1	
19	01184-10020		BOLT & WASHER	8	
20	234A6-82181		BOLT	2	
21	234A6-82191		BOLT	1	
22	234A6-82201		SCREW	14	
23	234A6-82211		SCREW	5	
24	234A6-82221		SEAL,A	1	
25	234A6-82231		SEAL,B	2	
26	234A6-82241		MOLE	1	
27	NO PART NO.		STAPLE	30	
28	234A6-82251		SUSPENSION	1	
29	234A6-82261		RAIL,SLIDE A	1	
30	234A6-82271		RAIL,SLIDE C	1	
31	234A6-82281		CABLE	1	
32	234A6-82291		WASHER	2	
33	234A6-82301		BOLT	4	
34	02010-00008		WASHER	4	
35	01400-00008		NUT	4	

Fig.69 MAIN PUMP (G-TYPE)
(F5037110)

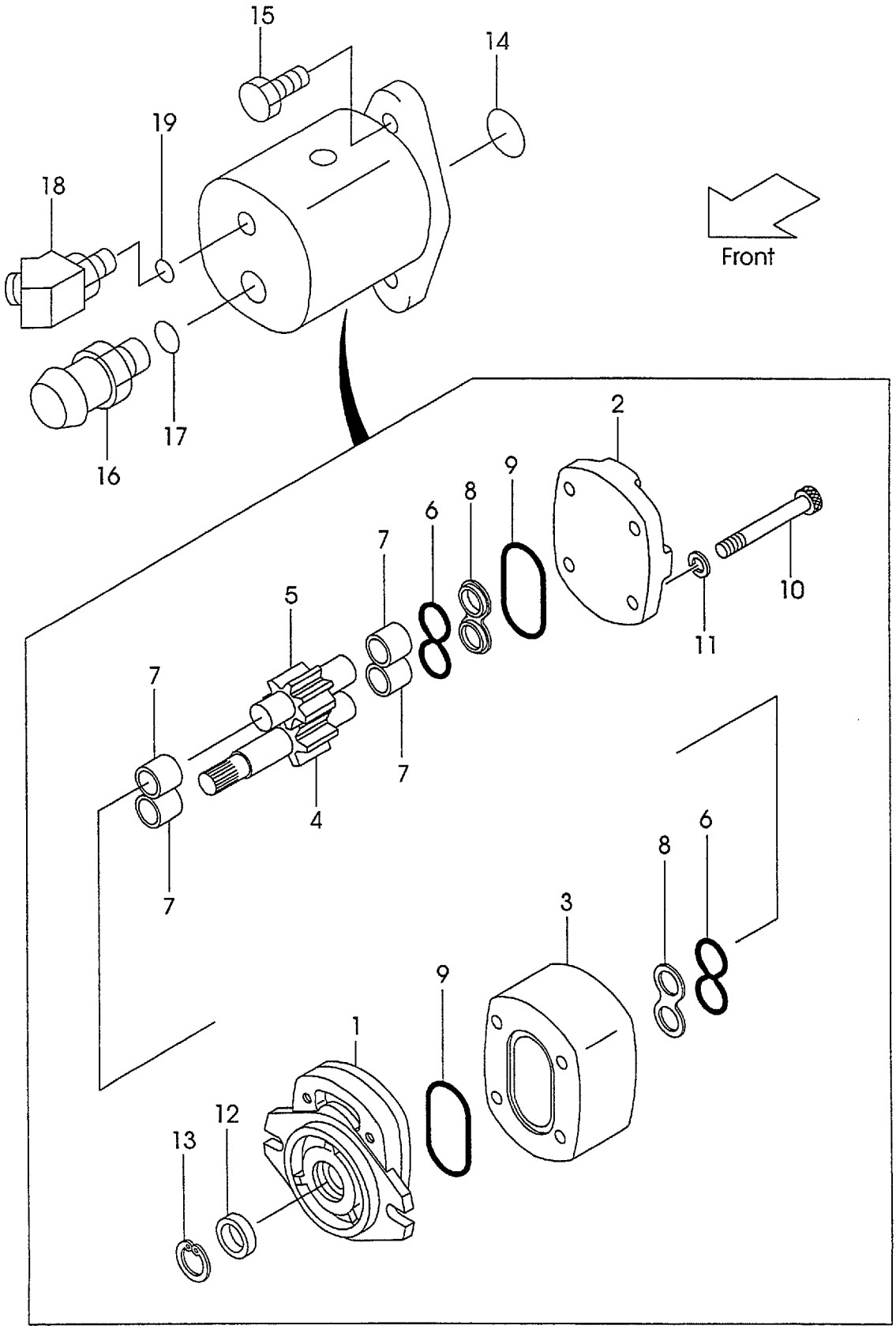

Fig.69
(F5037110)

A:FG30C6 C:FD30C6
B:FG30T6 D:FD30T6

Item No	Part No.	Mark	Description	Req'd	Remarks : Serial No.
A1	110F7-10271		PUMP,GEAR	1	A,B
					INC.1-13
1	R-402-12038-04		COVER,FRONT	1	A,B
2	R-402-12040-01		COVER,REAR	1	A,B
3	R-402-12101-04		BODY	1	A,B
4	R-402-12105-08		GEAR,DRIVE	1	A,B
5	R-402-12107-04		GEAR,DRIVEN	1	A,B
6	R-402-12143-00		PLATE,SIDE	2	A,B
7	R-400-50884-00		BUSHING	4	A,B
8	NO PART NO.	#*	GASKET	2	A,B
9	NO PART NO.	#*	GASKET	2	A,B
10	R-400-50647-03		BOLT	4	A,B
11	R-402-00012-12		WASHER	4	A,B
12	NO PART NO.	#*	SEAL,OIL	1	A,B
13	NO PART NO.	#*	RING,SNAP	1	A,B
14	03340-00140		O-RING	1	A,B
15	01185-10030		BOLT & WASHER	2	A,B
A2	225A7-62021		NIPPLE	1	A,B
					INC.16,17
16	225A7-62031		NIPPLE	1	A,B
17	03320-00290		O-RING	1	A,B
A3	216M7-62101		ADAPTER	1	A,B
					INC.18,19
18	216M7-62111		ADAPTER	1	A,B
19	03320-00180		O-RING	1	A,B
K1	110F7-12001		KIT,REPAIR	1	A,B
					INC.8,9,12,13

Fig.70 MAIN PUMP (D-TYPE)
(F5037120)

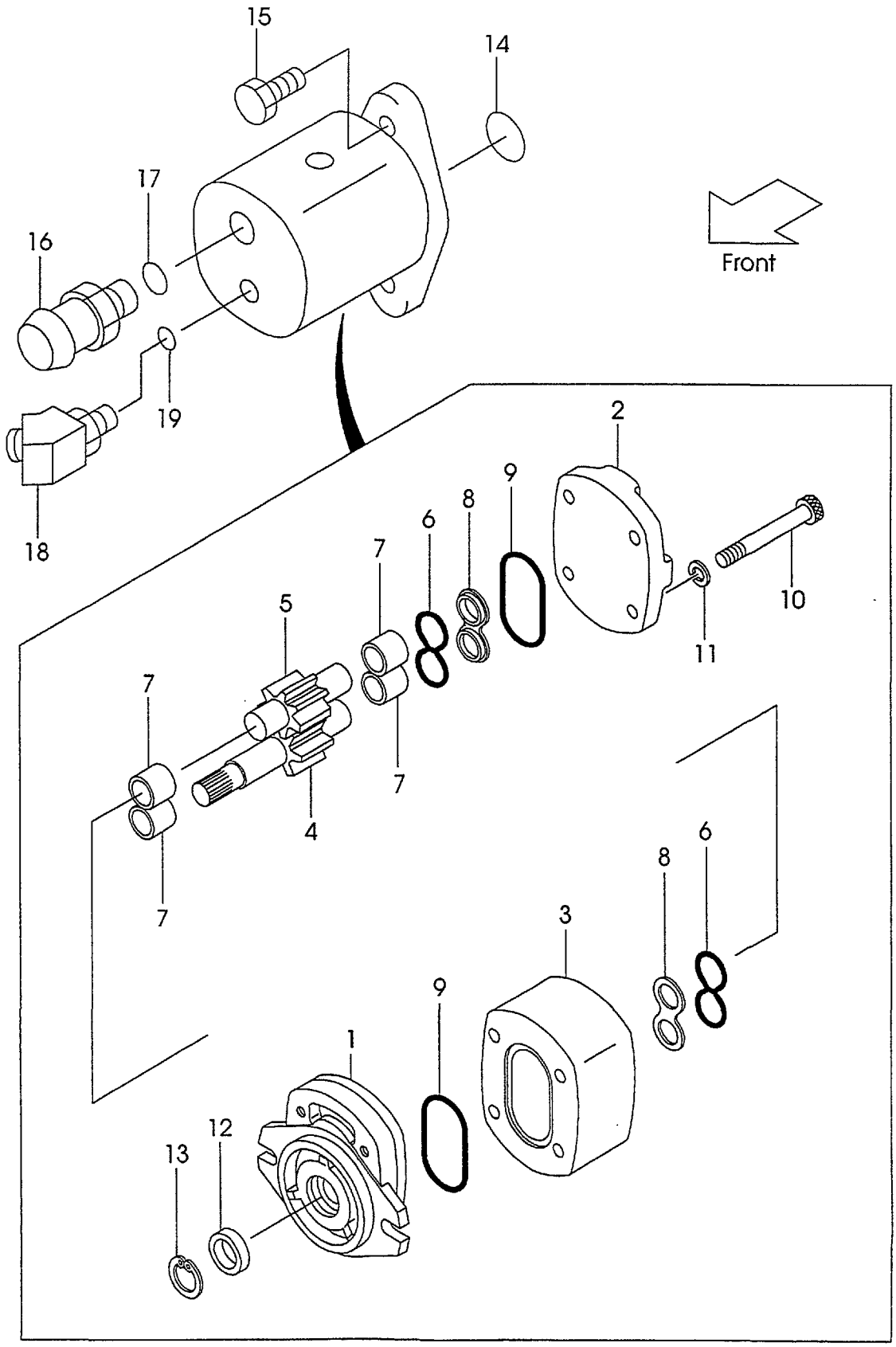

A:FG30C6 C:FD30C6
B:FG30T6 D:FD30T6

Fig.70
(F5037120)

Item No	Part No.	Mark	Description	Req'd	Remarks : Serial No.
A1	117M7-10401		PUMP,GEAR	1	C,D
					INC.1-13
1	R-402-12038-03		COVER,FRONT	1	C,D
2	R-402-12040-01		COVER,REAR	1	C,D
3	R-402-12647-10		BODY	1	C,D
4	R-402-12105-23		GEAR,DRIVE	1	C,D
5	R-402-12107-11		GEAR,DRIVEN	1	C,D
6	R-402-12143-00		PLATE,SLIDE	2	C,D
7	R-400-50884-00		BUSHING	4	C,D
8	R-402-12086-00		GASKET	2	C,D
9	R-402-12754-00		GASKET	2	C,D
10	R-402-65004-41		BOLT	4	C,D
11	R-402-00710-12		WASHER	4	C,D
12	R-400-00384-15		SEAL,OIL	1	C,D
13	R-026-63028-00		RING,SNAP	1	C,D
14	03340-00140		O-RING	1	C,D
15	01185-10030		BOLT & WASHER	2	C,D
A2	225A7-62021		NIPPLE	1	C,D
					INC.16,17
16	225A7-62031		NIPPLE	1	C,D
17	03320-00290		O-RING	1	C,D
A3	271A7-60351		ADAPTER	1	C,D
					INC.18,19
18	271A7-62161		ADAPTER	1	C,D
19	03320-00180		O-RING	1	C,D

Fig.71 CONTROL VALVE[2SV]
(F5037310)

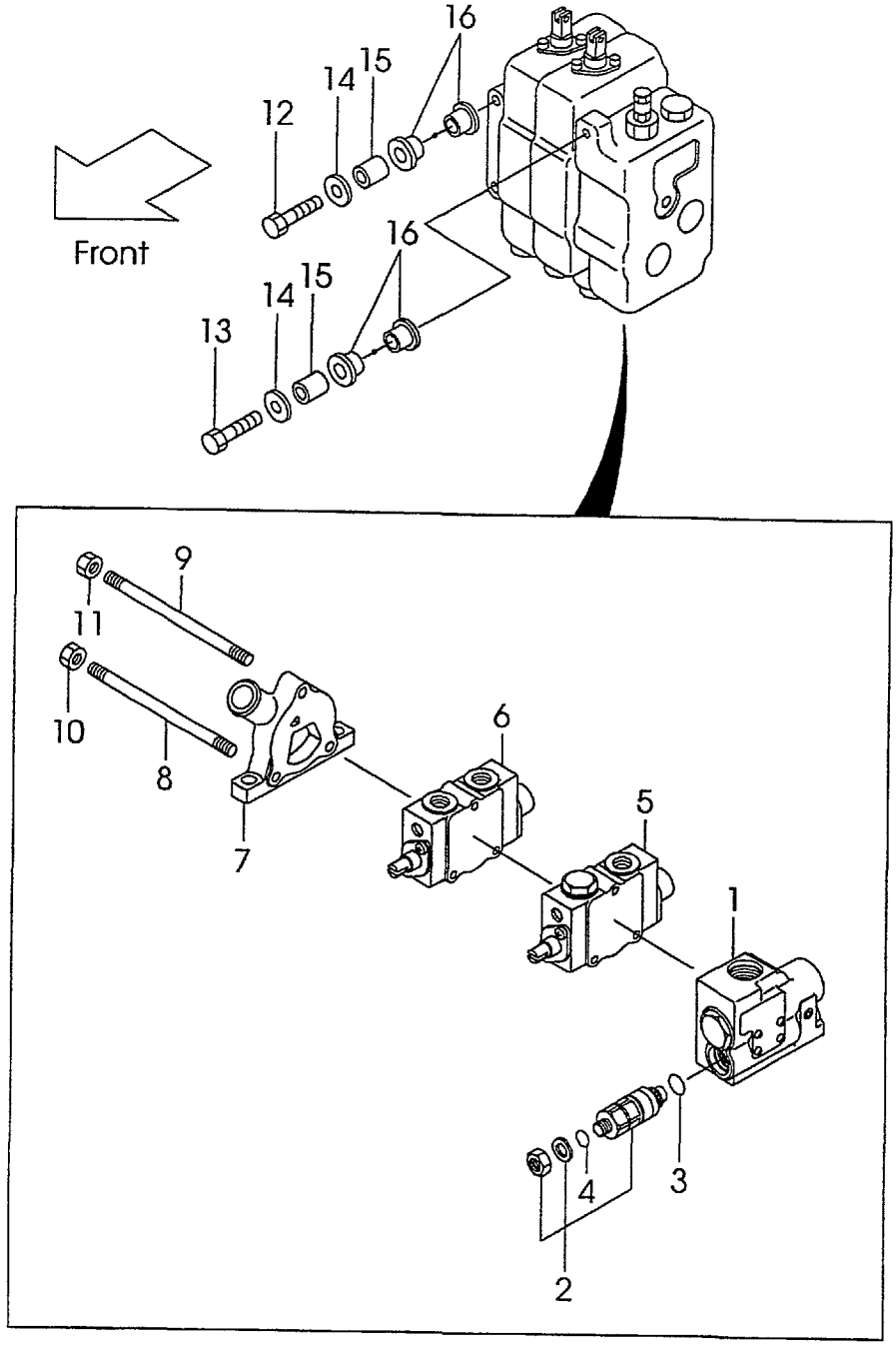

A:FG30C6 C:FD30C6
B:FG30T6 D:FD30T6

Item No	Part No.	Mark	Description	Req'd	Remarks : Serial No.
A1	234A7-30202		VALVE-ASSY,CONTROL	1	INC.1-11
1	B-21013-37344		SECTION,INLET	1	SEE FIG.72
2	63130-25614		VALVE,RELIEF	1	INC.3.4
3	B-21001-00036	*	O-RING	1	
4	B-95113-01000	*	O-RING	1	
5	NO PART NO.	#	SECTION,SPOOL A	1	SEE FIG.73
6	NO PART NO.	#	SECTION,SPOOL B	1	SEE FIG.74
7	B-21011-30134		SECTION,OUTLET	1	
8	B-21011-31106		ROD,TIE	2	
9	B-21011-31105		ROD,TIE	1	
10	B-93118-08652		NUT	2	
11	B-93128-10082		NUT	1	
12	216G7-32041		BOLT	2	
13	234A7-32001		BOLT	1	
14	216G7-32021		WASHER	3	
15	216G7-32011		COLLAR	3	
16	216G7-32001		RUBBER	6	
K1	B-2101A-30016		KIT,SEAL	1	INC.3.4

Fig.72 INLET SECTION
(F5037320)

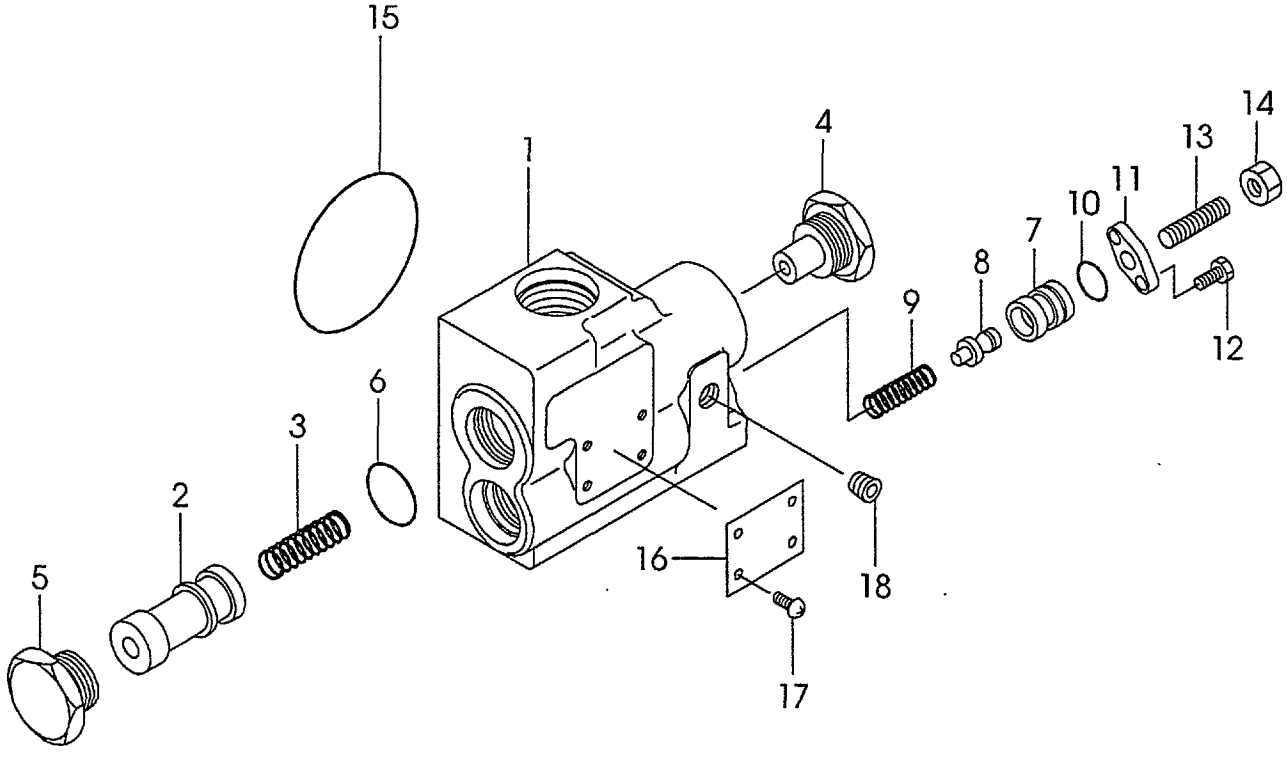

A:FG30C6 C:FD30C6
B:FG30T6 D:FD30T6

Fig.72
(F5037320)

Item No	Part No.	Mark	Description	Req'd	Remarks : Serial No.
A1	B-21013-37344		SECTION-ASSY,INLET	1	INC.1-18
1	NO PART NO.	#	SECTION,INLET	1	
2	B-21731-30257	#	SPOOL	1	
3	B-21731-30802		SPRING	1	
4	B-21733-40212		CONNECTOR	1	
5	B-21731-30613		PLUG	1	
6	B-95113-02400		O-RING	1	
7	B-21731-30703		HOUSING	1	
8	B-21731-30502		POPPET	1	
9	B-21731-30306		SPRING	1	
10	B-95111-01200		O-RING	1	
11	B-21731-30406		PLATE	1	
12	B-92703-06181		BOLT	2	
13	B-91511-08180		SCREW	1	
14	B-93364-08052		NUT	1	
15	B-21001-00106		O-RING	1	
16	NO PART NO.	#	NAME PLATE	1	
17	NO PART NO.	#	SCREW	4	
18	B-97123-01111		PLUG	1	

Fig.73 SPOOL SECTION(A)

(F5037330)

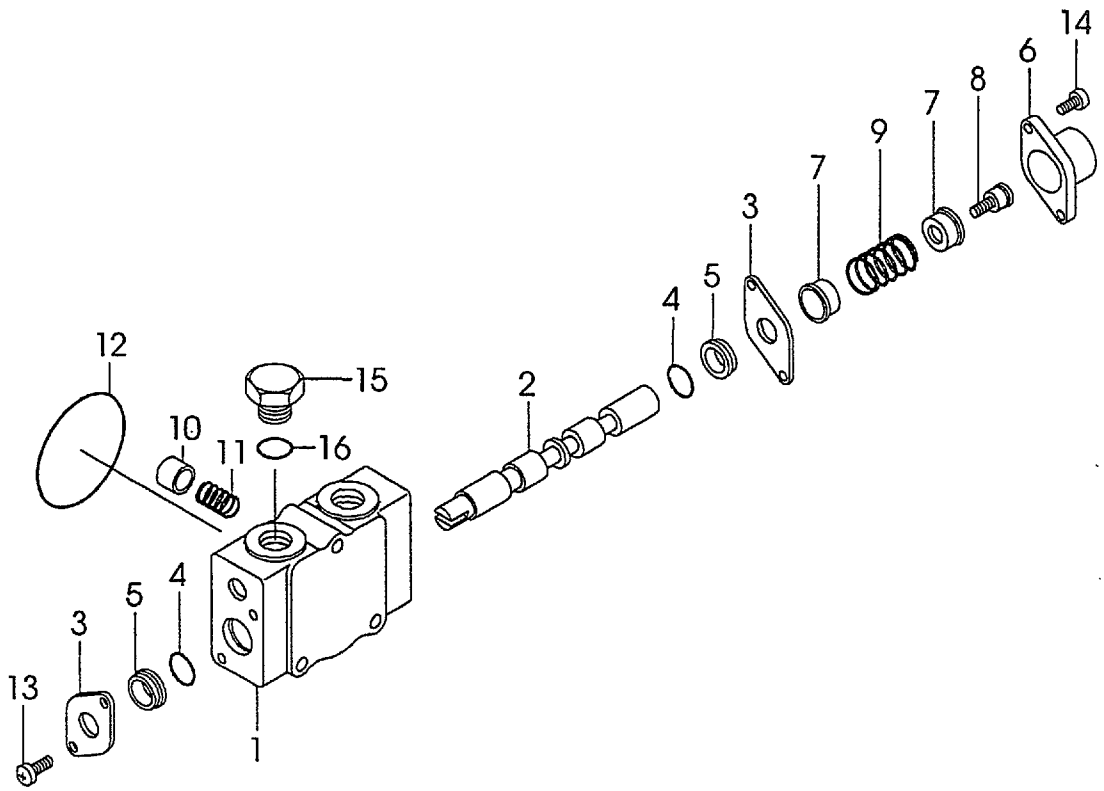

A:FG30C6 C:FD30C6
B:FG30T6 D:FD30T6

Fig.73
(F5037330)

Item No	Part No.	Mark	Description	Req'd	Remarks : Serial No.
A1	B-21013-36432		SECTION-ASSY,SPOOL A	1	INC.1-16
1	NO PART NO.	#	HOUSING	1	
2	NO PART NO.	#	SPOOL	1	
3	B-21011-31702		PLATE	2	
4	B-21001-00689		O-RING	2	
5	B-21011-32801		WIPER	2	
6	B-21011-31011		CAP	1	
7	B-21011-30702		SEAT	2	
8	B-21011-30507		SCREW	1	
9	B-21011-30603		SPRING	1	
10	B-21011-32404		POPPET	1	
11	B-21011-30604		SPRING	1	
12	B-21001-00106		O-RING	1	
13	B-91111-60102		SCREW	2	
14	B-92703-06181		BOLT	2	
15	B-21001-90408		PLUG	1	
16	B-95113-01800		O-RING	1	

Fig.74 SPOOL SECTION(B)
(F5037340)

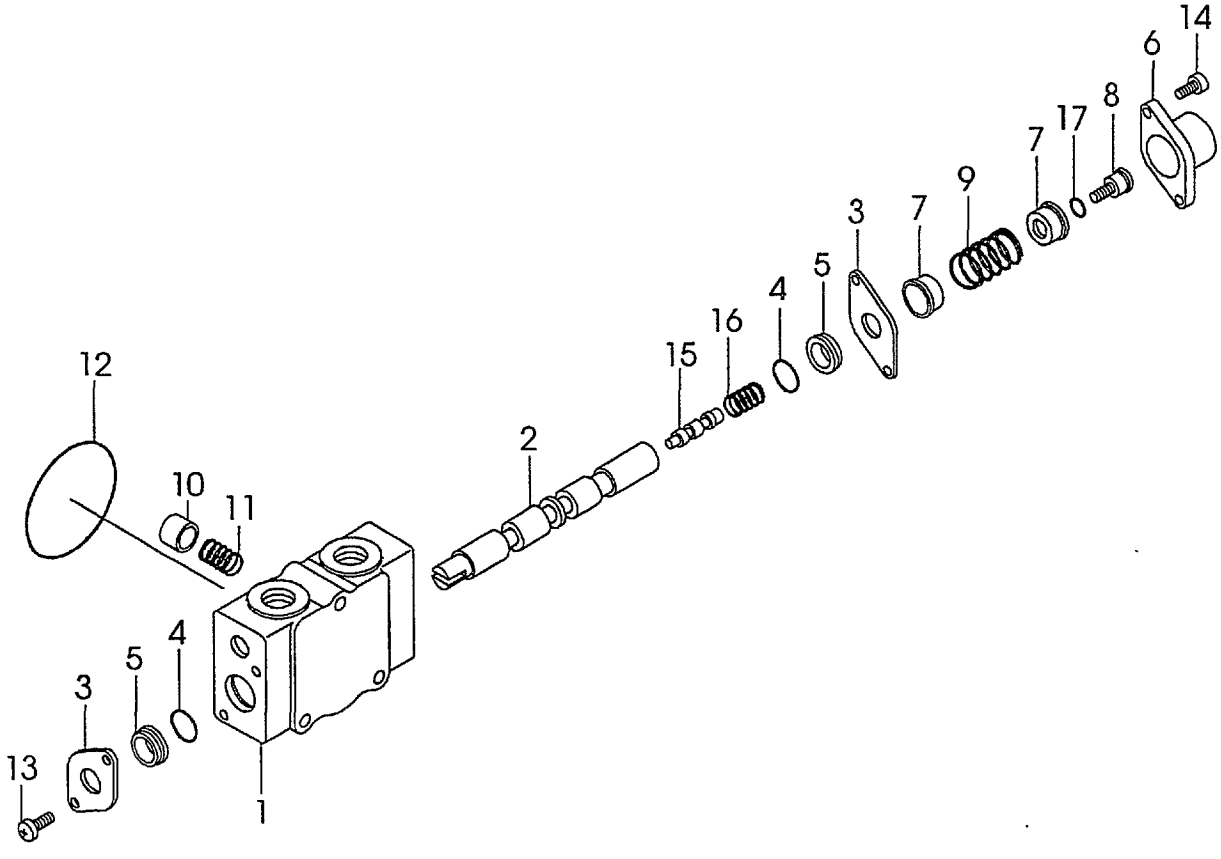

A:FG30C6 C:FD30C6
B:FG30T6 D:FD30T6

Fig.74
(F5037340)

Item No	Part No.	Mark	Description	Req'd	Remarks : Serial No.
A1	B-21013-36433		SECTION-ASSY,SPOOL B	1	INC.1-17
1	NO PART NO.	#	HOUSING	1	
2	NO PART NO.	#	SPOOL	1	
3	B-21011-31702		PLATE	2	
4	B-21001-00689		O-RING	2	
5	B-21011-32801		WIPER	2	
6	B-21011-31011		CAP	1	
7	B-21011-30702		SEAT	2	
8	B-21011-30528		SCREW	1	
9	B-21011-30603		SPRING	1	
10	B-21011-32404		POPPET	1	
11	B-21011-30604		SPRING	1	
12	B-21001-00106		O-RING	1	
13	B-91111-60102		SCREW	2	
14	B-92703-06181		BOLT	2	
15	NO PART NO.		VALVE	1	
16	B-21011-30618		SPRING	1	
17	B-95133-00500		O-RING	1	

Fig.75 CONTROL VALVE FITTING
(F5037350)

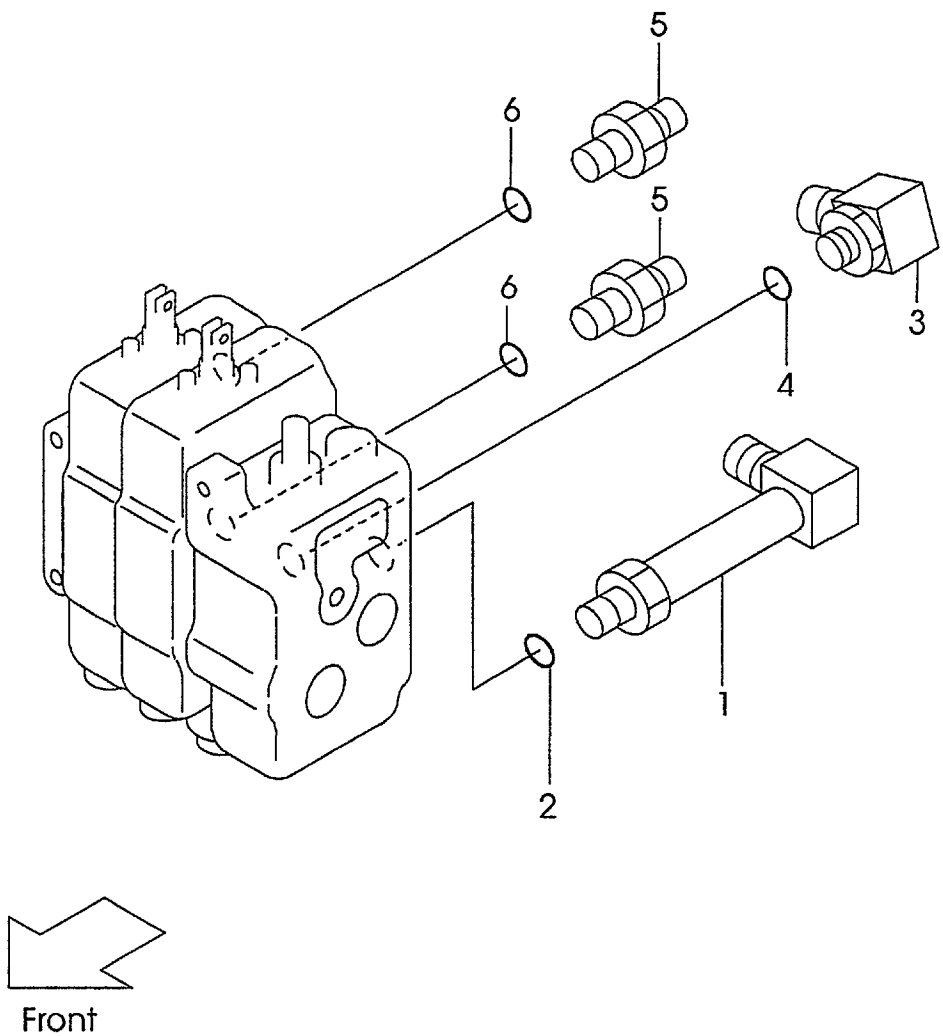

A:FG30C6 C:FD30C6
B:FG30T6 D:FD30T6

Fig.75
(F5037350)

Item No	Part No.	Mark	Description	Req'd	Remarks : Serial No.
A1	22777-60301		ELBOW-ASSY	1	INC.1,2
1	22777-62001		ELBOW	1	
2	03320-00180		O-RING	1	
A2	04150-30404		ELBOW-ASSY	1	INC.3,4
3	04150-10404		ELBOW	1	
4	03320-00180		O-RING	1	
A3	277H7-60601		NIPPLE-ASSY	2	INC.5,6
5	63110-12281		NIPPLE	2	
6	03320-00140		O-RING	2	

Fig.76 VALVE CONTROL[2SV]
(F50373A0)

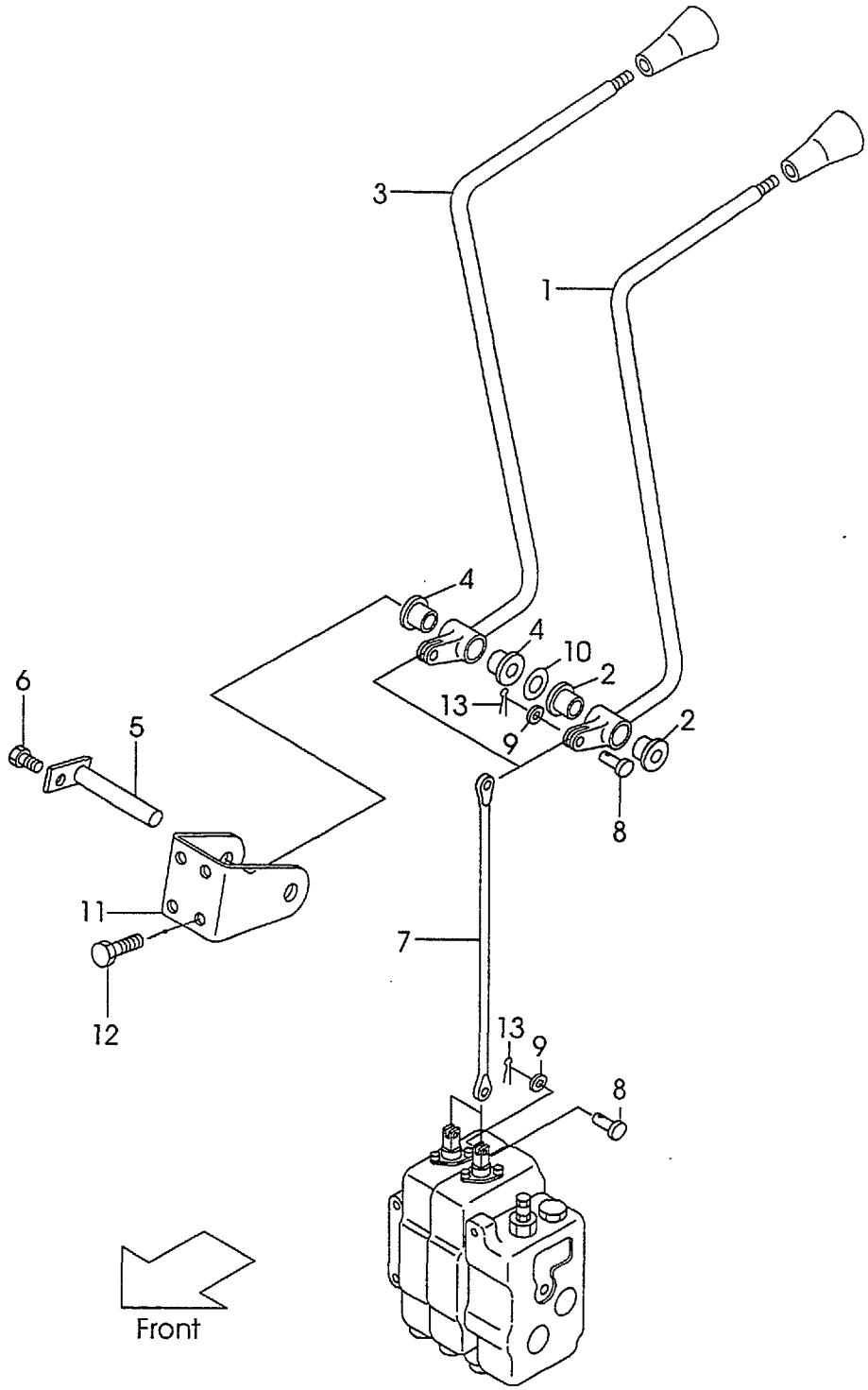

A:FG30C6 C:FD30C6
B:FG30T6 D:FD30T6

Fig.76
(F50373A0)

Item No	Part No.	Mark	Description	Req'd	Remarks : Serial No.
A1	216G7-40012		LEVER-ASSY,LIFT	1	INC.1,2
1	NO PART NO.	#	LEVER,LIFT	1	
2	214A7-42071		BUSHING	2	
A2	216G7-40022		LEVER-ASSY,TILT	1	INC.3,4
3	NO PART NO.	#	LEVER,TILT	1	
4	214A7-42071		BUSHING	2	
5	23647-40041		SHAFT	1	
6	01183-06012		BOLT & WASHER	1	
7	214A7-42171		JOINT	2	
8	22717-40061		PIN	4	
9	02000-00005		WASHER	4	
10	22517-40051		SHIM	3	
11	216G7-42001		BRACKET	1	
12	216H3-92281		BOLT	4	
13	02200-16010		PIN	4	

Fig.77 VALVE CONTROL KNOB
(F50373B0)

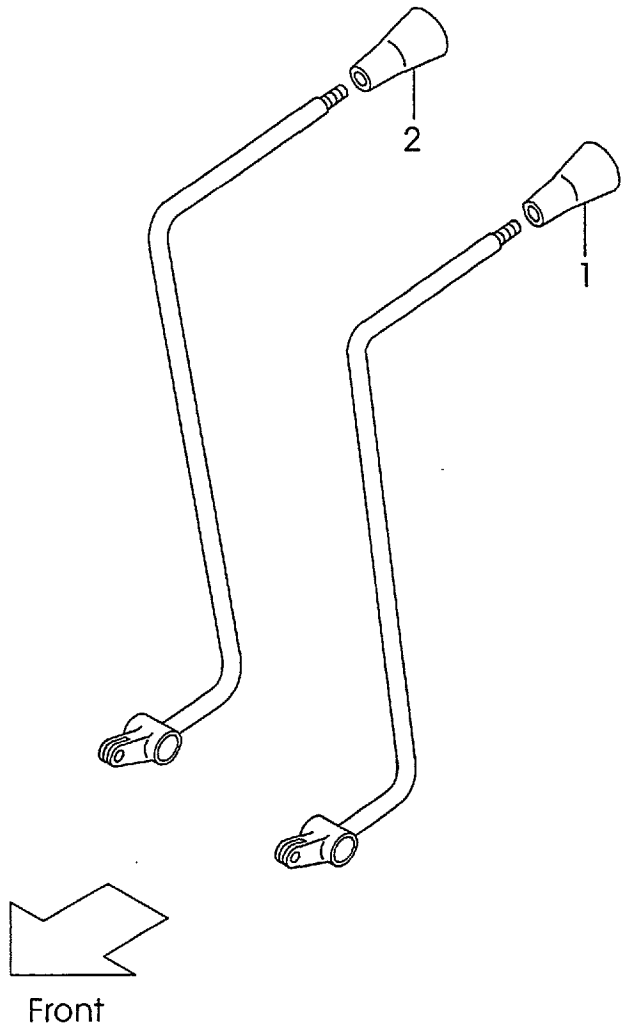

A:FG30C6 C:FD30C6
B:FG30T6 D:FD30T6

Fig.77
(F50373B0)

Item No	Part No.	Mark	Description	Req'd	Remarks : Serial No.
1	214A7-42001		KNOB,LIFT	1	
2	281E7-42011		KNOB,TILT	1	

Fig.78 HYDRAULIC LINE(MAIN)(1/3)(G-TYPE)
(F5037610)

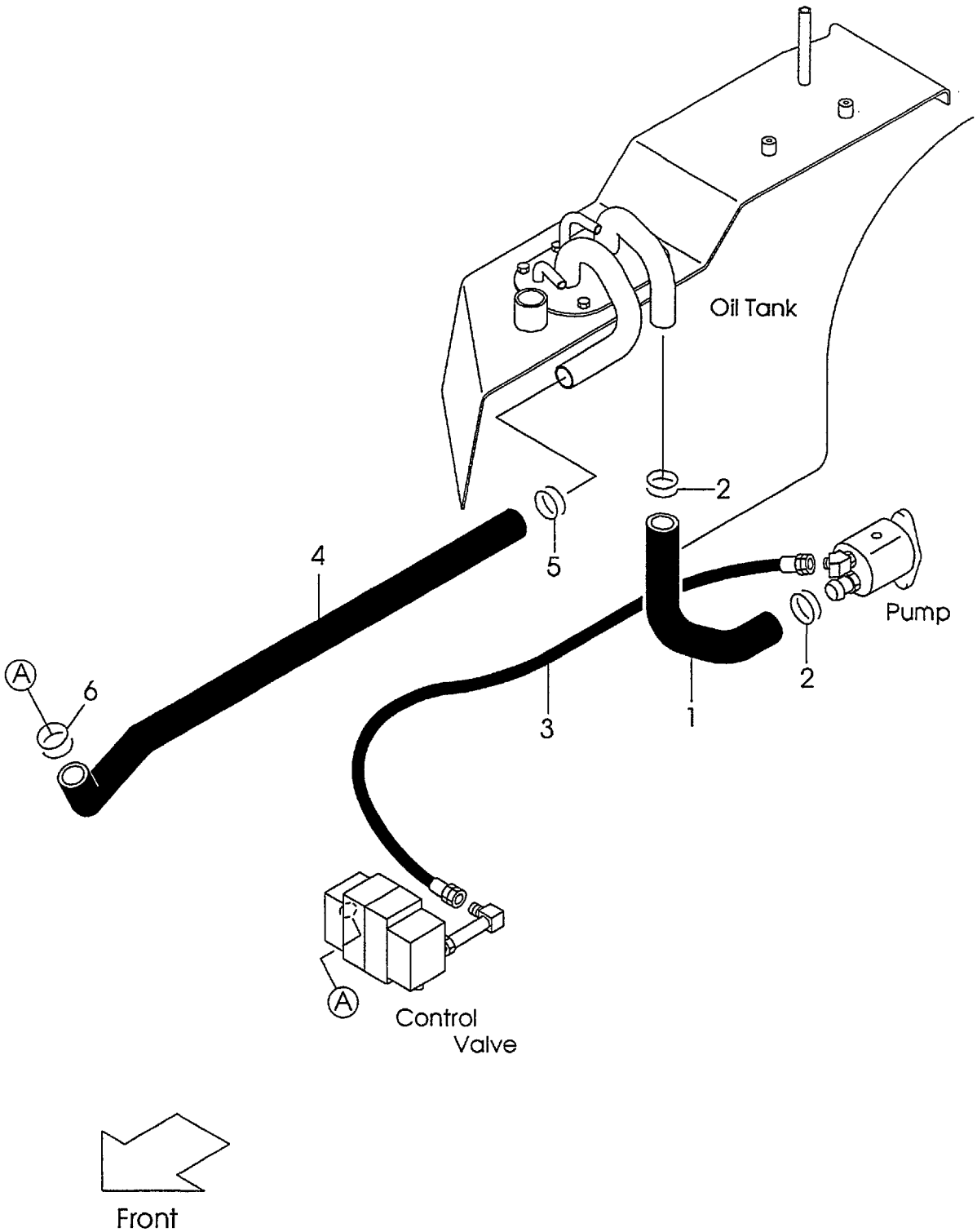

A:FG30C6 C:FD30C6
B:FG30T6 D:FD30T6

Fig.78
(F5037610)

Item No	Part No.	Mark	Description	Req'd	Remarks : Serial No.
1	218G7-62111		HOSE	1	A,B
2	04911-00046		CLIP	2	A,B
3	04691-04108		HOSE	1	A,B
4	234A7-62101		HOSE	1	A,B
5	04911-00044		CLIP	1	A,B
6	04911-00040		CLIP	1	A,B

Fig.79 HYDRAULIC LINE(MAIN)(1/3)(D-TYPE)
(F5037620)

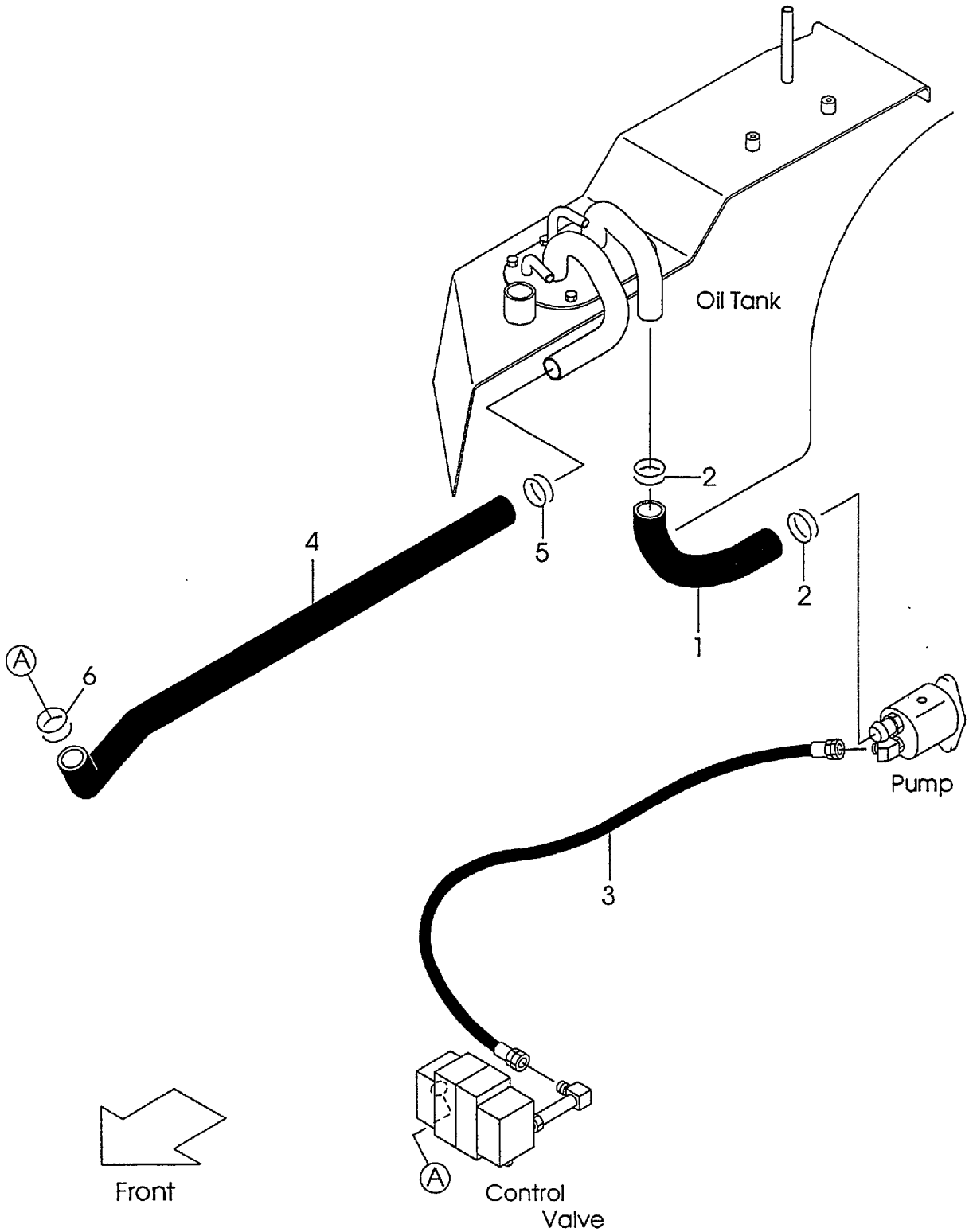

A:FG30C6 C:FD30C6
B:FG30T6 D:FD30T6

Fig.79
(F5037620)

Item No	Part No.	Mark	Description	Req'd	Remarks : Serial No.
1	219M7-62011		HOSE	1	C,D
2	04911-00046		CLIP	2	C,D
3	04691-04108		HOSE	1	C,D
4	234A7-62101		HOSE	1	C,D
5	04911-00044		CLIP	1	C,D
6	04911-00040		CLIP	1	C,D

Fig.80 HYDRAULIC LINE(MAIN)(2/3)
(F5037650)

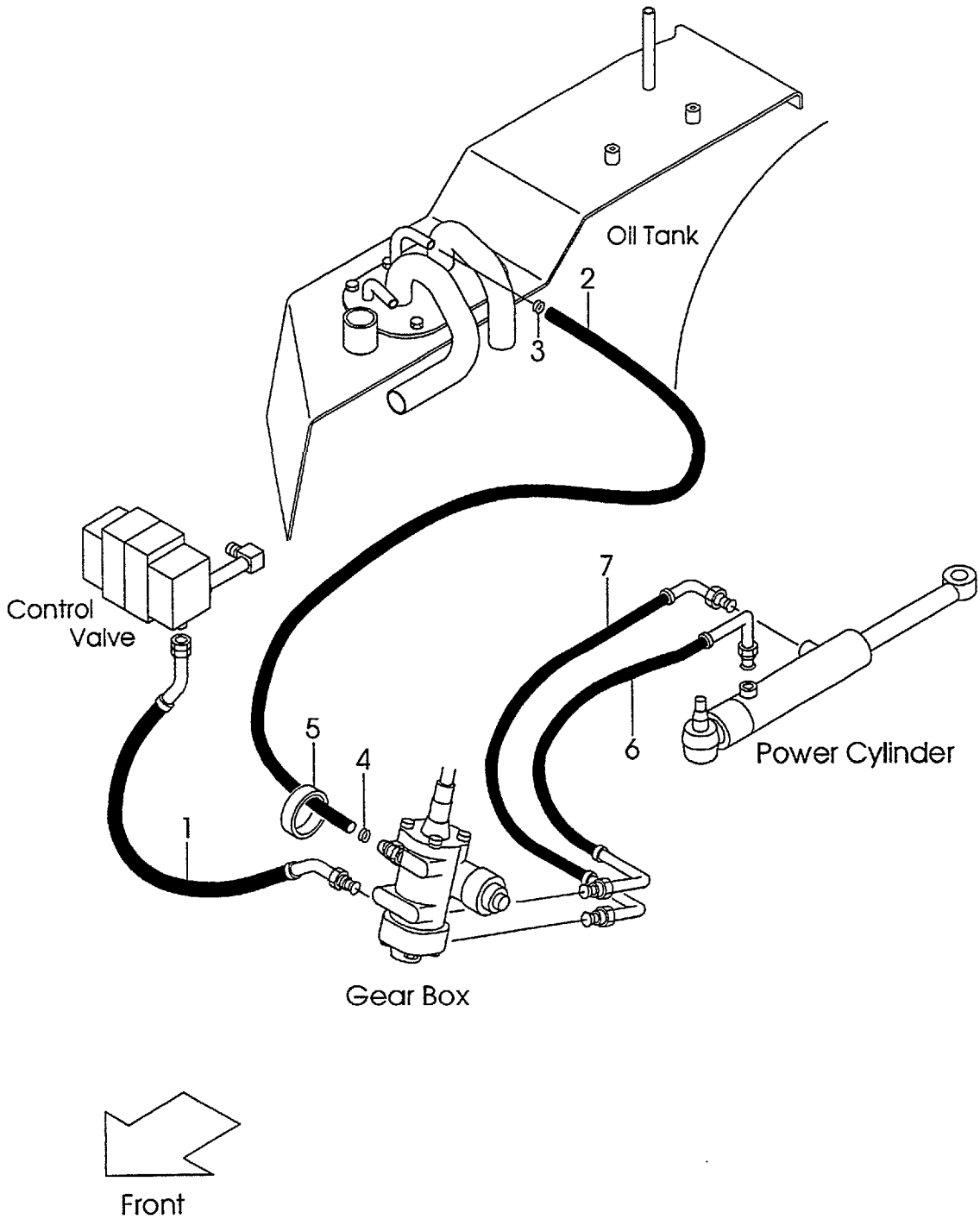

A:FG30C6 C:FD30C6
B:FG30T6 D:FD30T6

Fig.80
(F5037650)

Item No	Part No.	Mark	Description	Req'd	Remarks : Serial No.
1	214A7-62131		HOSE	1	
2	04710-04140		HOSE	1	
3	04911-00021		CLIP	1	
4	04911-00020		CLIP	1	
5	27042-42312		BAND	2	
6	239A7-60301		HOSE	1	
7	239A7-60311		HOSE	1	

FIG.81 HYDRAULIC LINE(MAIN)(2/3) [OBT]<EXC>
(F50376A0)

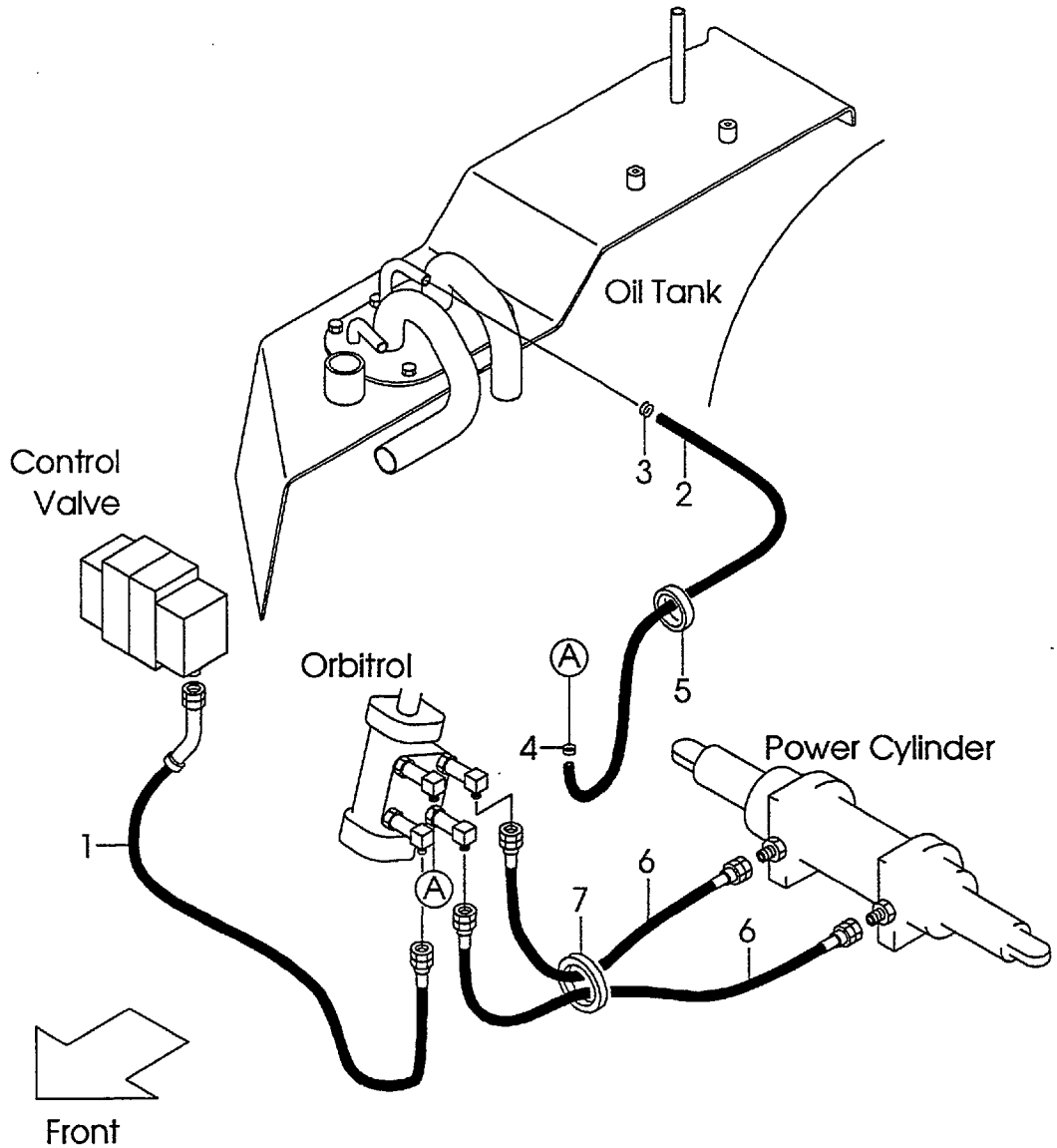

A:FG30C6 C:FD30C6
B:FG30T6 D:FD30T6

FIG.81
(F50376A0)

Item No	Part No.	Mark	Description	Req'd	Remarks : Serial No.
1	215E7-62091		HOSE	1	[OBT][EXC]
2	04710-04165		HOSE	1	[OBT][EXC]
3	04911-00021		CLIP	1	[OBT][EXC]
4	04911-00020		CLIP	1	[OBT][EXC]
5	27042-42312		BAND	2	[OBT][EXC]
6	523S2-42512		HOSE	2	[OBT][EXC]
7	04913-11380		BAND	2	[OBT][EXC]

FIG.82 HYDRAULIC LINE(MAIN)(3/3)

(F5037660)

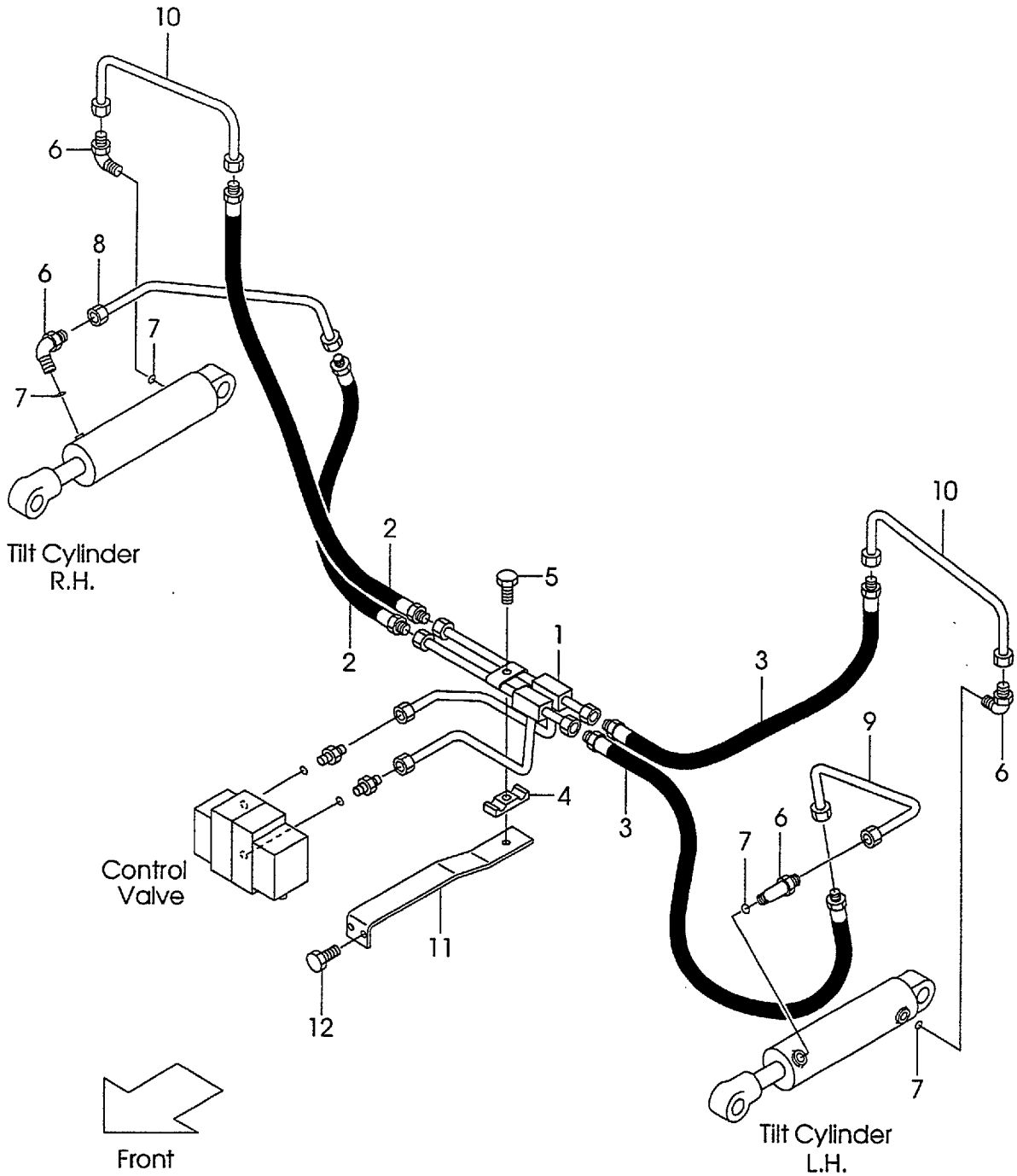

FIG.82
(F5037660)

A:FG30C6 C:FD30C6
B:FG30T6 D:FD30T6

Item No	Part No.	Mark	Description	Req'd	Remarks : Serial No.
1	239A7-62111		PIPE,TILT	1	
2	239A7-62251		HOSE,RH	2	
3	239A7-62261		HOSE,LH	2	
4	239A7-62351		RUBBER	1	
5	01183-08025		BOLT	1	
A1	277H7-60501		ELBOW-ASSY	4	INC.6,7
6	277H7-62351		ELBOW	4	
7	03320-00110		O-RING	4	
8	239A7-62211		PIPE,RH	1	
9	239A7-62121		PIPE,LH	1	
10	239A7-62131		PIPE,LH	2	
11	239A7-62401		BRACKET	1	
12	01183-08020		BOLT	2	

FIG.83 HYDRAULIC LINE(MAIN)(TOR-CON)(G-TYPE)
(F5037680)

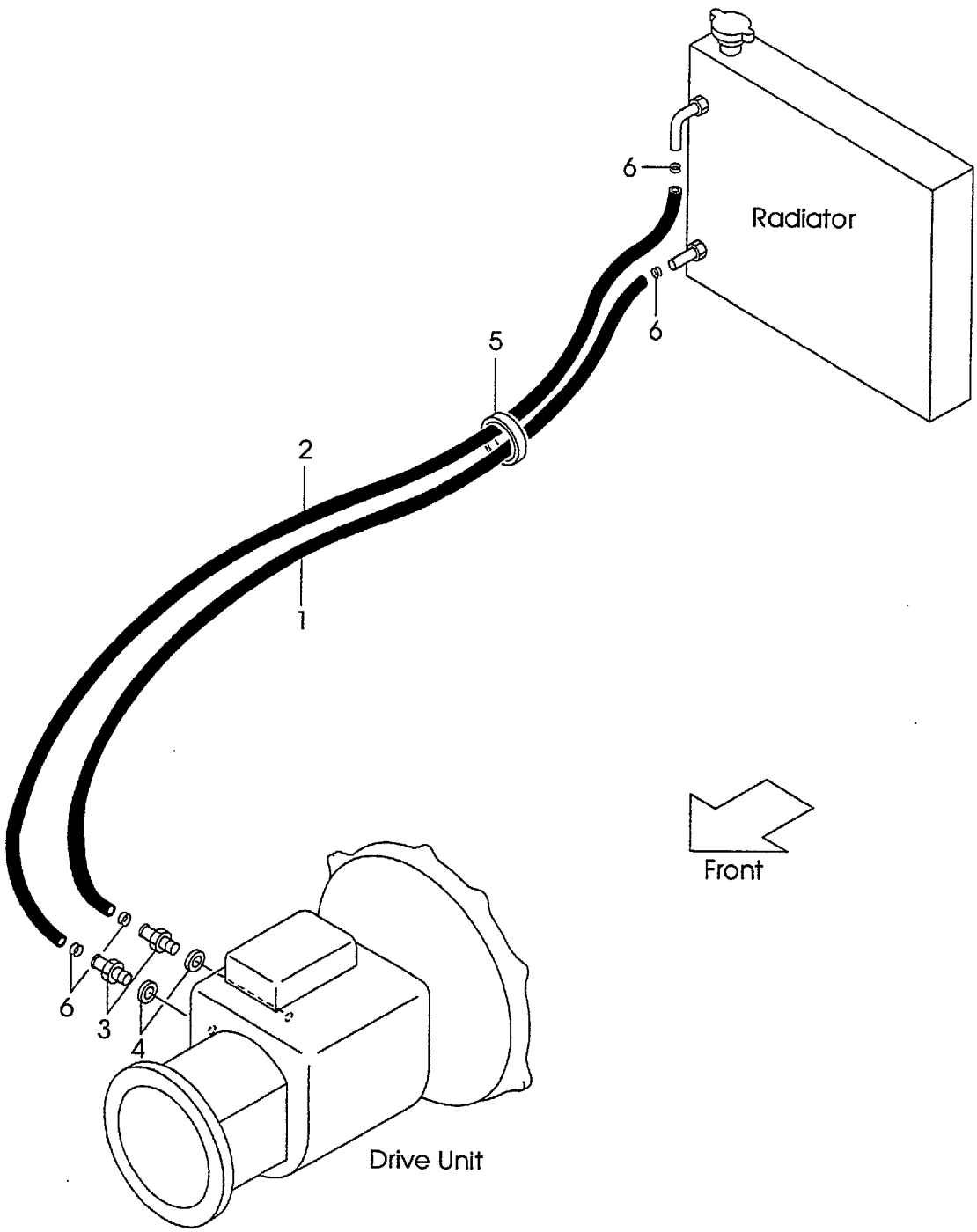

FIG.83
(F5037680)

A:FG30C6 C:FD30C6
B:FG30T6 D:FD30T6

Item No	Part No.	Mark	Description	Req'd	Remarks : Serial No.
1	228U7-62201		HOSE	1	B
2	228U7-62211		HOSE	1	B
3	228U7-62221		NIPPLE	2	B
4	23467-82041		PACKING	2	B
5	04913-20380		BAND	1	B
6	25787-82081		CLIP	4	B

FIG.84 HYDRAULIC LINE(MAIN)(TOR-CON)(D-TYPE)

(F5037690)

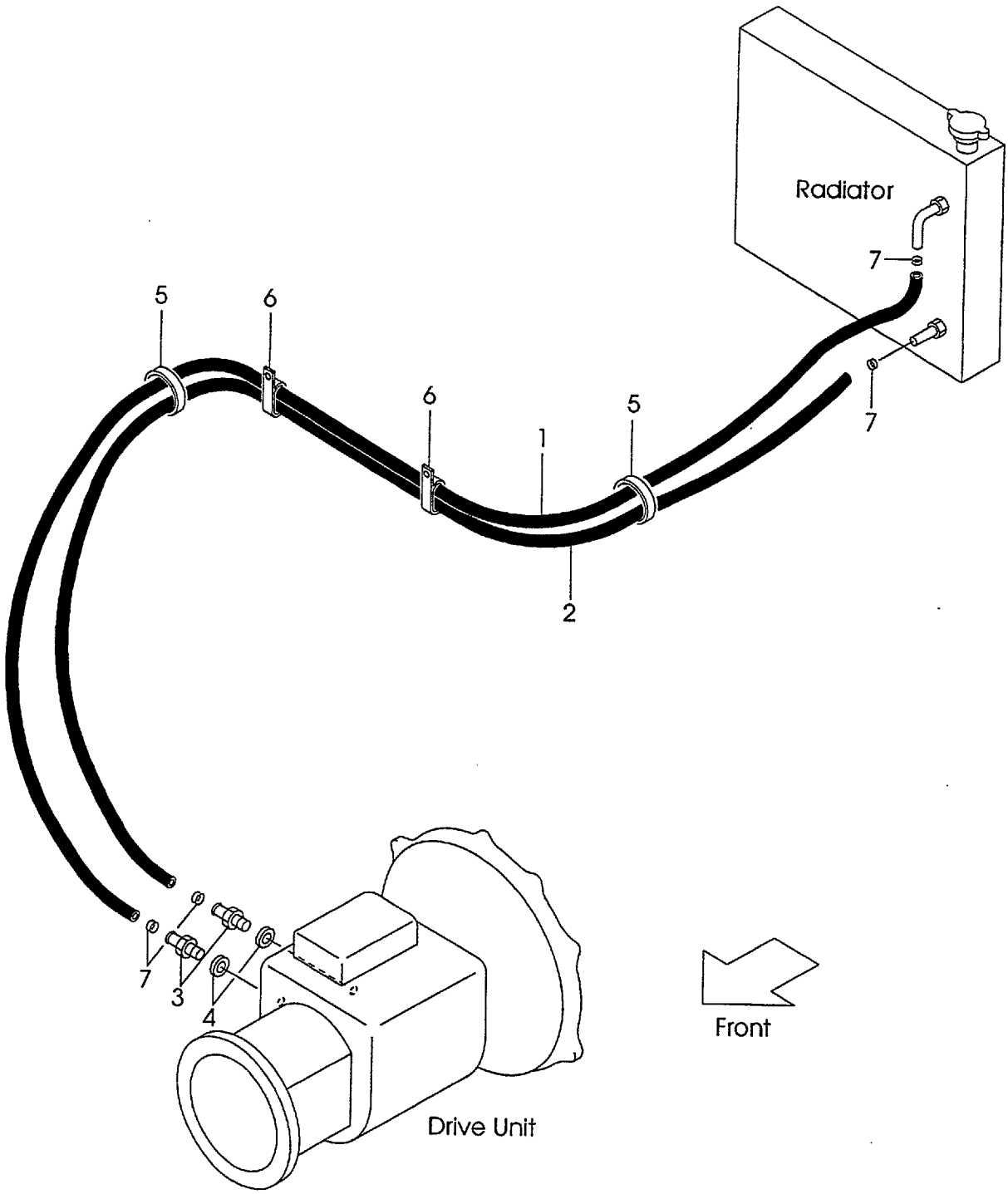

FIG.84
(F5037690)

A:FG30C6 C:FD30C6
B:FG30T6 D:FD30T6

Item No	Part No.	Mark	Description	Req'd	Remarks : Serial No.
1	234B7-82101		HOSE	1	D
2	234B7-82111		HOSE	1	D
3	228U7-62221		NIPPLE	2	D
4	23467-82041		PACKING	2	D
5	04913-20380		BAND	2	D
6	25957-62201		CLIP	2	D
7	25787-82081		CLIP	4	D

Fig.85 TILT CYLINDER

(F5038510)

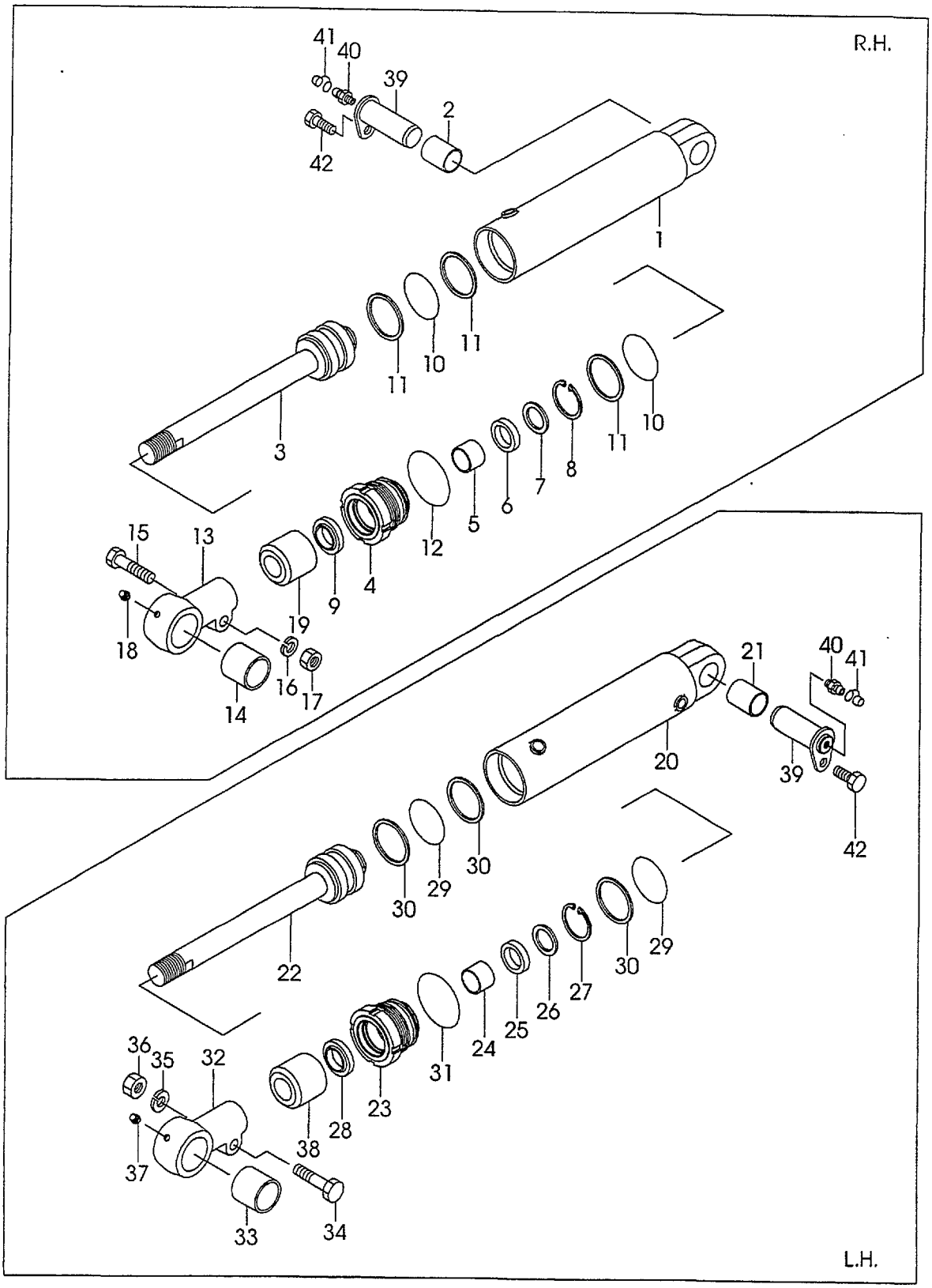

A:FG30C6 C:FD30C6
B:FG30T6 D:FD30T6

Item No	Part No.	Mark	Description	Req'd	Remarks : Serial No.
A1	234A8-50103		CYL-ASSY,TILT RH	1	INC.1-19
A2	B-B670B-00086		TUBE-ASSY,RH	1	INC.1,2
1	NO PART NO.	#	TUBE,RH	1	
2	B-30421-30005		BUSHING	1	
3	B-B6127-20612		ROD,PISTON	1	
4	B-30121-70133		CAP,CYL	1	
5	B-96401-30159		BUSHING	1	
6	B-30961-03012	*	U-RING	1	
7	B-30151-03006		SPACER	1	
8	B-30141-35012		RING,SNAP	1	
9	B-30191-30025	*	RING,WIPER	1	
10	B-95112-06000	*	O-RING	2	
11	B-95713-06000	*	RING,BACK-UP	3	
12	B-95121-07000	*	O-RING	1	
A3	B-3065B-00211		END-ASSY	1	INC.13,14
13	NO PART NO.	#	END	1	
14	B-30431-35009		BUSHING	1	
15	B-B6341-01401		BOLT	1	
16	B-30311-01403		WASHER	1	
17	B-B6351-01401		NUT	1	
18	B-96111-10613		FITTING	1	
19	NO PART NO.		SPACER	1	
A4	234A8-50113		CYL-ASSY,TILT LH	1	INC.20-38
A5	B-B670B-00087		TUBE-ASSY,LH	1	INC.20,21
20	NO PART NO.	#	TUBE,LH	1	
21	B-30421-30005		BUSHING	1	
22	B-B6127-20612		ROD,PISTON	1	
23	B-30121-70133		CAP,CYL	1	
24	B-96401-30159		BUSHING	1	
25	B-30961-03012	*	U-RING	1	
26	B-30151-03006		SPACER	1	
27	B-30141-35012		RING,SNAP	1	
28	B-30191-30025	*	RING,WIPER	1	
29	B-95112-06000	*	O-RING	2	
30	B-95713-06000	*	RING,BACK-UP	3	
31	B-95121-07000	*	O-RING	1	
A6	B-3065B-00211		END-ASSY	1	INC.32,33
32	NO PART NO.	#	END	1	
33	B-30431-35009		BUSHING	1	
34	B-B6341-01401		BOLT	1	
35	B-30311-01403		WASHER	1	
36	B-B6351-01401		NUT	1	
37	B-96111-10613		FITTING	1	
38	NO PART NO.		SPACER	1	
39	216G8-52201		PIN	2	
40	04901-00100		FITTING	2	
41	22199-12401		CAP	2	
42	216G8-52301		BOLT	2	
K1	B-3070A-00103		KIT,REPAIR RH	1	INC.6,9-12
K2	B-3070A-00103		KIT,REPAIR LH	1	INC.25,28-31

Fig.86 DECAL
(F5039110)

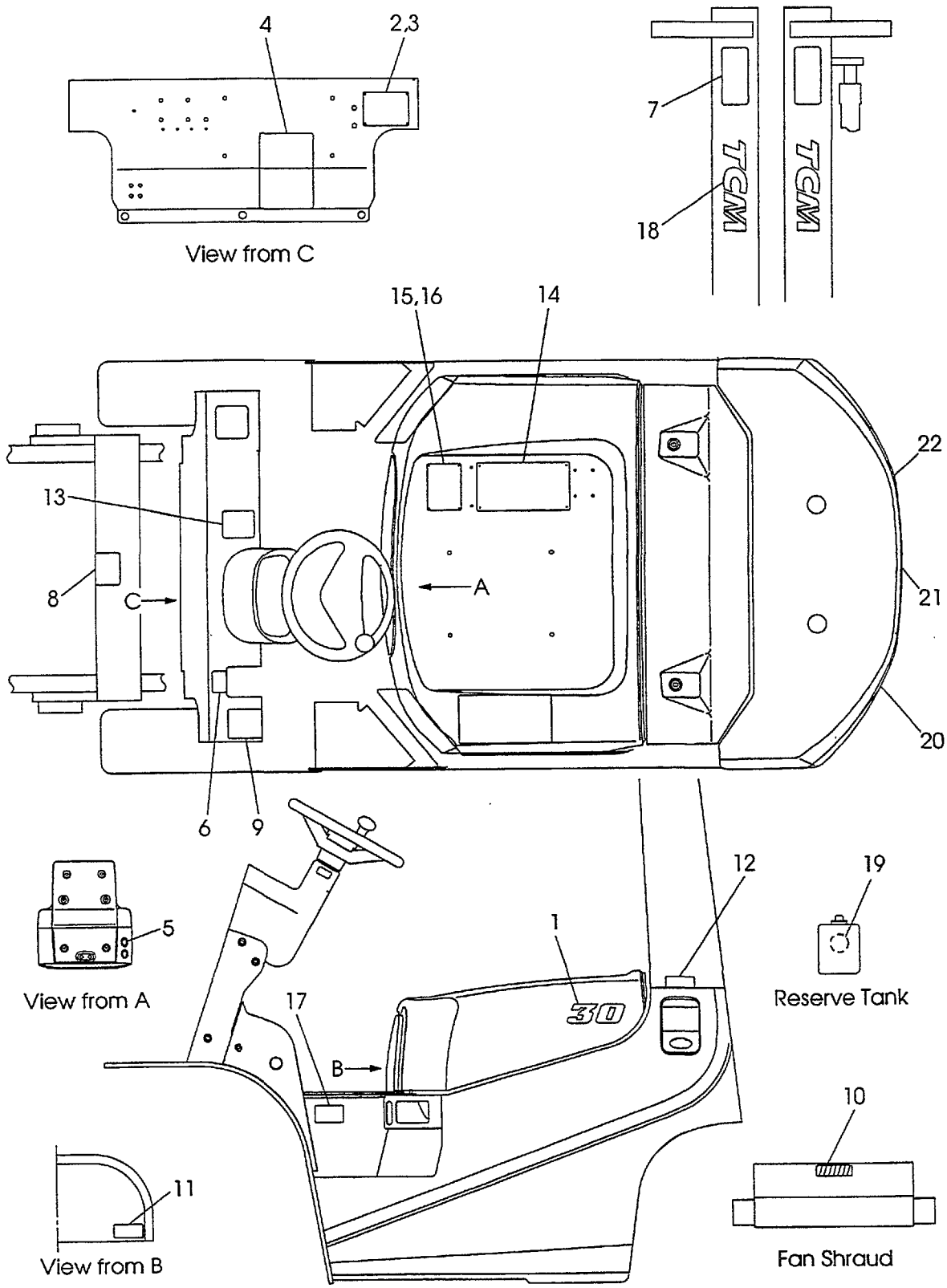

A:FG30C6 C:FD30C6
B:FG30T6 D:FD30T6

Fig.86
(F5039110)

Item No	Part No.	Mark	Description	Req'd	Remarks : Serial No.
1	239F9-12001		DECAL,MODEL MARK 30	2	
2	216G9-10101		PLATE,NAME	1	
3	216G9-12131		RIVET	4	
4	25789-12051		DECAL,LUBRICATION	1	
5	216G9-12071		DECAL,STARTER SW.	1	
6	214A5-53012		DECAL,PARKING LEVER	1	
7	27419-12062		DECAL,CAUTION MAST	2	
8	27419-12072		DECAL,CAUTION CROSS	1	
9	216G9-12062		DECAL,CAUTION TIRE	1	
10	216G9-12052		DECAL,CAUTION FAN	1	
11	238F9-12071		DECAL,CAPACITY FUEL	1	
12	21239-12501		DECAL,GASOLINE	1	A,B
-	21159-12501		DECAL,LIGHT OIL	1	C,D
13	271A9-12251		DECAL,CAUTION	1	
14	23659-12054		DECAL,WARNING PLATE	1	
15	222Q9-12001		CHART,CAPACITY 3T	1	[VM200-500]
-	222Q9-12011		CHART,CAPACITY 3T	1	[VM550-600]
16	02432-01008		RIVET	4	
17	27049-12172		DECAL,AIRE PRESSURE	1	
18	256C9-12291		DECAL,TRADE MARK	2	
19	23659-12101		DECAL,LONGLIFE COOL	1	
20	216G9-12013		DECAL,T	1	
21	216G9-12023		DECAL,C	1	
22	216G9-12033		DECAL,M	1	

Fig.87 DECAL<EXB>
(F50391B0)

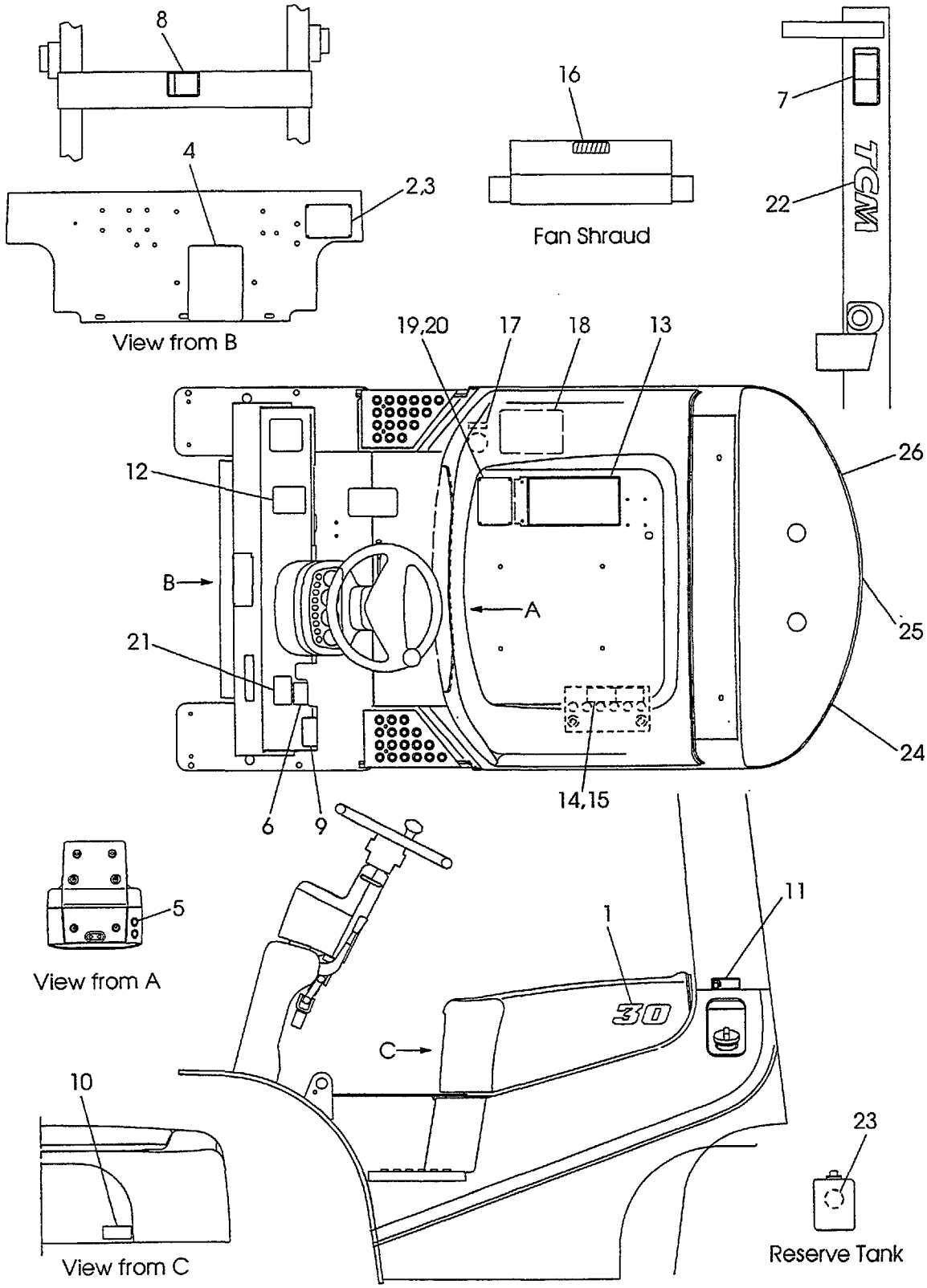

A:FG30C6 C:FD30C6
B:FG30T6 D:FD30T6

Item No	Part No.	Mark	Description	Req'd	Remarks : Serial No.
1	239F9-12001		DECAL,MODEL MARK 30	2	[EXB]
2	516G3-82402		PLATE,NAME	1	[EXB](ENGLISH)
-	516G2-82011		PLATE,NAME	1	[EXB/SNP](SPANISH)
-	516G2-82021		PLATE,NAME	1	[EXB/FNP](FRENCH)
-	516G2-82031		PLATE,NAME	1	[EXB/CNP](CHINESE)
-	232W9-10101		PLATE,NAME	1	[EXB/RNP](RUSSIA)
3	216G9-12131		RIVET	4	[EXB]
4	52672-72122		DECAL,LUBRICATION	1	[EXB](ENGLISH)
-	53652-82352		DECAL,LUBRICATION	1	[EXB/SNP](SPANISH)
-	55959-12052		DECAL,LUBRICATION	1	[EXB/FNP](FRENCH)
-	52672-82062		DECAL,LUBRICATION	1	[EXB/CNP](CHINESE)
-	225R9-12031		DECAL,LUBRICATION	1	[EXB/RNP](RUSSIA)
5	216G9-12071		DECAL,STARTER SW.	1	[EXB](ENGLISH)
-	516G3-82011		DECAL,STARTER SW.	1	[EXB/SNP](SPANISH)
-	216G9-12071		DECAL,STARTER SW.	1	[EXB/FNP](FRENCH)
-	216G9-12071		DECAL,STARTER SW.	1	[EXB/CNP](CHINESE)
-	232W9-12001		DECAL,STARTER SW.	1	[EXB/RNP](RUSSIA)
6	514A3-82002		DECAL,PARKING LEVER	1	[EXB](ENGLISH)
-	514A3-82012		DECAL,PARKING LEVER	1	[EXB/SNP](SPANISH)
-	514A3-82022		DECAL,PARKING LEVER	1	[EXB/FNP](FRENCH)
-	514A2-82012		DECAL,PARKING LEVER	1	[EXB/CNP](CHINESE)
-	225R9-12112		DECAL,PARKING LEVER	1	[EXB/RNP](RUSSIA)
7	27419-12061		DECAL,CAUTION MAST	2	[EXB]
8	27419-12071		DECAL,CAUTION CROSS	1	[EXB]
9	516G2-72711		DECAL,CAUTION TIRE	1	[EXB](ENGLISH)
-	516G3-82211		DECAL,CAUTION TIRE	1	[EXB/SNP](SPANISH)
-	516G3-82221		DECAL,CAUTION TIRE	1	[EXB/FNP](FRENCH)
-	516G2-82061		DECAL,CAUTION TIRE	1	[EXB/CNP](CHINESE)
-	232W9-12021		DECAL,CAUTION TIRE	1	[EXB/RNP](RUSSIA)
10	536G2-82181		DECAL,CAPACITY FUEL	1	[EXB](ENGLISH)
-	536G3-82001		DECAL,CAPACITY FUEL	1	[EXB/SNP](SPANISH)
-	536G3-82011		DECAL,CAPACITY FUEL	1	[EXB/FNP](FRENCH)
-	536G2-82281		DECAL,CAPACITY FUEL	1	[EXB/CNP](CHINESE)
-	239T9-12071		DECAL,CAPACITY FUEL	1	[EXB/RNP](RUSSIA)
11	51232-82001		DECAL,GASOLINE	1	A,B [EXB](ENGLISH)
-	51232-82021		DECAL,GASOLINE	1	A,B [EXB/SNP](SPANISH)
-	51232-82011		DECAL,GASOLINE	1	A,B [EXB/FNP](FRENCH)
-	51232-82032		DECAL,GASOLINE	1	A,B [EXB/CNP](CHINESE)
-	236G2-82021		DECAL,GASOLINE	1	A,B [EXB/RNP](RUSSIA)
-	522A2-72111		DECAL,LIGHT OIL	1	C,D [EXB](ENGLISH)
-	51152-82022		DECAL,LIGHT OIL	1	C,D [EXB/SNP](SPANISH)
-	51152-82012		DECAL,LIGHT OIL	1	C,D [EXB/FNP](FRENCH)

Fig.87 DECAL<EXB>
(F50391B0)

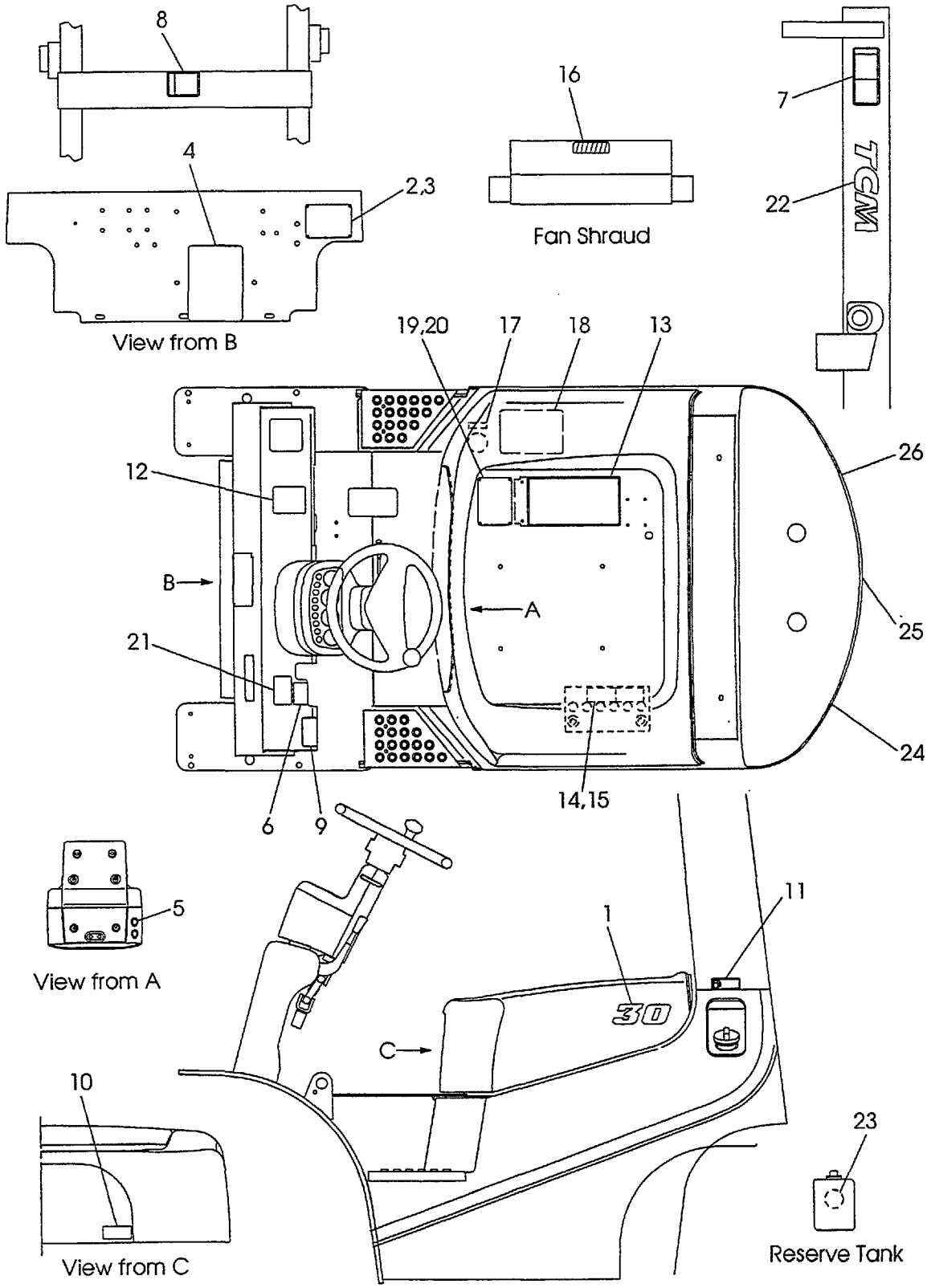

A:FG30C6 C:FD30C6
B:FG30T6 D:FD30T6

Fig.87
(F50391B0)

Item No	Part No.	Mark	Description	Req'd	Remarks : Serial No.
-	522A2-82151		DECAL,LIGHT OIL	1	C,D [EXB/CNP](CHINESE)
-	225R9-12001		DECAL,LIGHT OIL	1	C,D [EXB/RNP](RUSSIA)
12	571A3-82361		DECAL,CAUTION	1	[EXB]
13	516G3-82801		DECAL,CAUTION	1	[EXB](ENGLISH)
-	516G3-82821		DECAL,CAUTION	1	[EXB/SNP](SPANISH)
-	516G3-82831		DECAL,CAUTION	1	[EXB/FNP](FRENCH)
-	52672-82073		DECAL,CAUTION	1	[EXB/CNP](CHINESE)
-	225R9-12051		DECAL,CAUTION	1	[EXB/RNP](RUSSIA)
14	534A3-82311		DECAL,BATTERY-A	1	[EXB](ENGLISH)
-	534A3-82331		DECAL,BATTERY-A	1	[EXB/SNP](SPANISH)
-	534A3-82341		DECAL,BATTERY-A	1	[EXB/FNP](FRENCH)
-	534A3-82531		DECAL,BATTERY	1	[EXB/CNP](CHINESE)
-	232W9-12101		DECAL,BATTERY-A	1	[EXB/RNP](RUSSIA)
15	534A3-82421		DECAL,BATTERY-B	1	[EXB](ENGLISH)
-	534A3-82441		DECAL,BATTERY-B	1	[EXB/SNP](SPANISH)
-	534A3-82451		DECAL,BATTERY-B	1	[EXB/FNP](FRENCH)
-	232W9-12111		DECAL,BATTERY-B	1	[EXB/RNP](RUSSIA)
16	516G2-72701		DECAL,CAUTION FAN	1	[EXB](ENGLISH)
-	516G3-82111		DECAL,CAUTION FAN	1	[EXB/SNP](SPANISH)
-	516G3-82121		DECAL,CAUTION FAN	1	[EXB/FNP](FRENCH)
-	516G2-82051		DECAL,CAUTION FAN	1	[EXB/CNP](CHINESE)
-	232W9-12011		DECAL,CAUTION FAN	1	[EXB/RNP](RUSSIA)
17	53652-82401		DECAL,OIL	1	[EXB/SNP](SPANISH)
-	53652-82011		DECAL,OIL	1	[EXB/FNP](FRENCH)
-	53652-82541		DECAL,OIL	1	[EXB/CNP](CHINESE)
-	225R9-12071		DECAL,OIL	1	[EXB/RNP](RUSSIA)
18	53652-82551		DECAL,CAUTION	1	[EXB/CNP](CHINESE)
19	222Q9-12001		CHART,CAPACITY 3T	1	[EXB/VM200-500](ENGLISH)
-	222Q9-12011		CHART,CAPACITY 3T	1	[EXB/VM550-600](ENGLISH)
-	514A3-82331		CHART,CAPACITY	1	[EXB/SNP](SPANISH)
-	514A3-82341		CHART,CAPACITY	1	[EXB/FNP](FRENCH)
-	522Q2-82011		CHART,CAPACITY 3T	1	[EXB/CNP/VM200-500](CHINESE)
-	522Q2-82051		CHART,CAPACITY 3T	1	[EXB/CNP/VM550-600](CHINESE)
-	225T9-12001		CHART,CAPACITY 3T	1	[EXB/RNP/VM200-500](RUSSIA)
-	225T9-12011		CHART,CAPACITY 3T	1	[EXB/RNP/VM550-600](RUSSIA)
20	02432-01008		RIVET	4	[EXB]
21	27049-12172		DECAL,AIRE PRESSURE	1	[EXB]
22	256C9-12291		DECAL,TRADE MARK	2	[EXB]
23	23659-12101		DECAL,LONGLIFE COOL	1	[EXB](ENGLISH)(CHINESE)
-	522A3-82641		DECAL,LONGLIFE COOL	1	[EXB/SNP](SPANISH)
-	522A3-82841		DECAL,LONGLIFE COOL	1	[EXB/FNP](FRENCH)
-	232W9-12051		DECAL,LONGLIFE COOL	1	[EXB/RNP](RUSSIA)
24	216G9-12013		DECAL,T	1	[EXB]
25	216G9-12023		DECAL,C	1	[EXB]
26	216G9-12033		DECAL,M	1	[EXB]
27	55592-82001	+	DECAL,CERTIFICATE	1	[EXB]
28	225R9-12091	+	DECAL,BATTERY-SW	1	[EXB/RNP](RUSSIA)
29	225R9-12081	+	DECAL,OIL-PAN-HEAT	1	[EXB/RNP](RUSSIA)

Fig.88 DECAL<EXC>
(F50391C0)

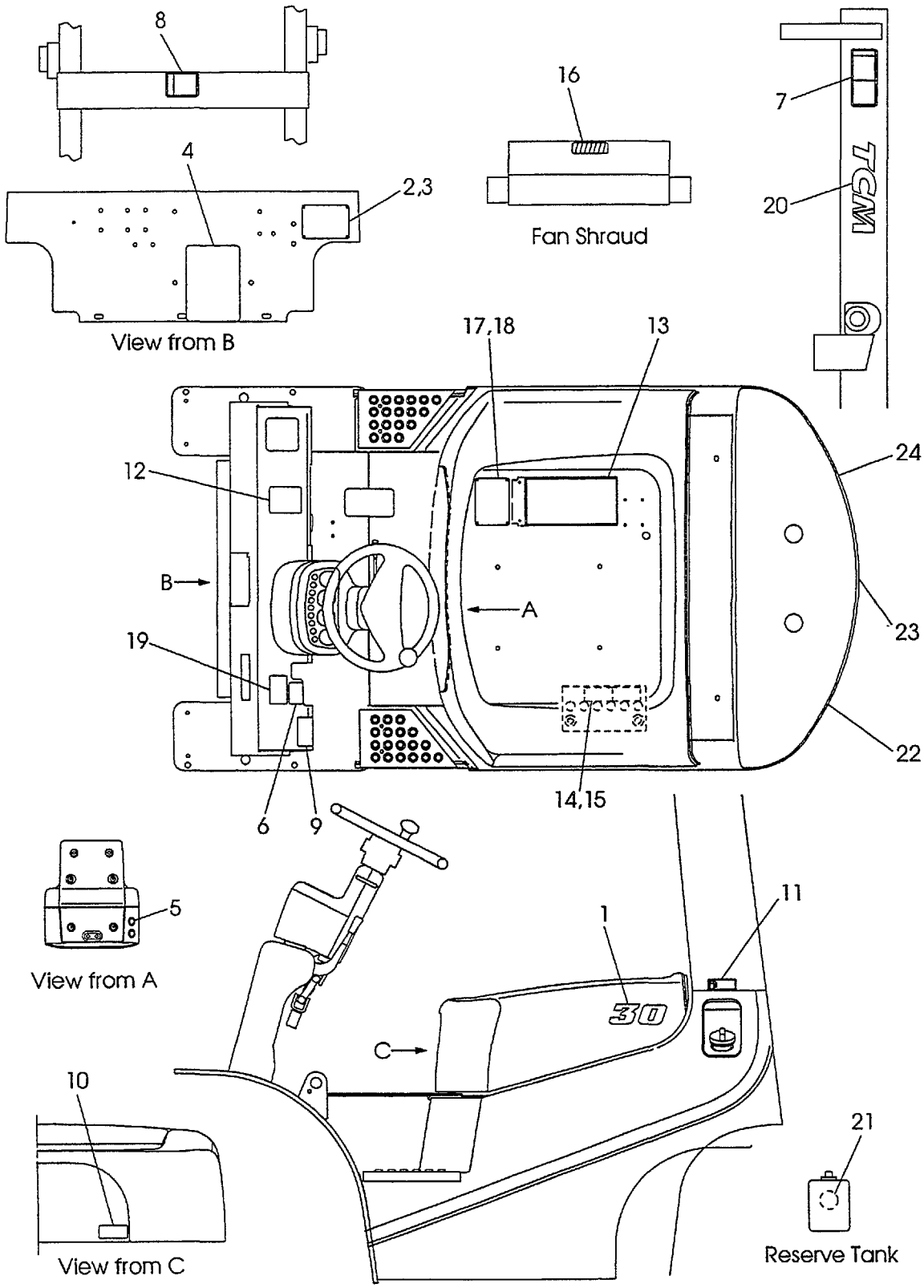

A:FG30C6 C:FD30C6
B:FG30T6 D:FD30T6

Fig.88
(F50391C0)

Item No	Part No.	Mark	Description	Req'd	Remarks : Serial No.
1	239F9-12001		DECAL,MODEL MARK 30	2	
2	516G3-82402		PLATE,NAME	1	
3	216G9-12131		RIVET	4	
4	52672-72122		DECAL,LUBRICATION	1	
5	216G9-12071		DECAL,STARTER SW.	1	
6	514A3-82002		DECAL,PARKING LEVER	1	
7	27419-12061		DECAL,CAUTION MAST	2	
8	27419-12071		DECAL,CAUTION CROSS	1	
9	516G2-72711		DECAL,CAUTION TIRE	1	
10	536G2-82181		DECAL,CAPACITY FUEL	1	
11	51232-82001		DECAL,GASOLINE	1	A,B
-	522A2-72111		DECAL,LIGHT OIL	1	C,D
12	571A3-82361		DECAL,CAUTION	1	
13	516G3-82801		DECAL,CAUTION	1	
14	534A3-82311		DECAL,BATTERY-A	1	
15	534A3-82421		DECAL,BATTERY-B	1	
16	516G2-72701		DECAL,CAUTION FAN	1	
17	514J2-92001		CHART,CAPACITY	1	
18	02432-01008		RIVET	4	
19	27049-12172		DECAL,AIRE PRESSURE	1	
20	256C9-12291		DECAL,TRADE MARK	2	
21	23659-12101		DECAL,LONGLIFE COOL	1	
22	216G9-12013		DECAL,T	1	
23	216G9-12023		DECAL,C	1	
24	216G9-12033		DECAL,M	1	
25	55592-82001	+	DECAL,CERTIFICATE	1	

Fig.89 SERVICE TOOLS<EXB,EXC>
(F5039210)

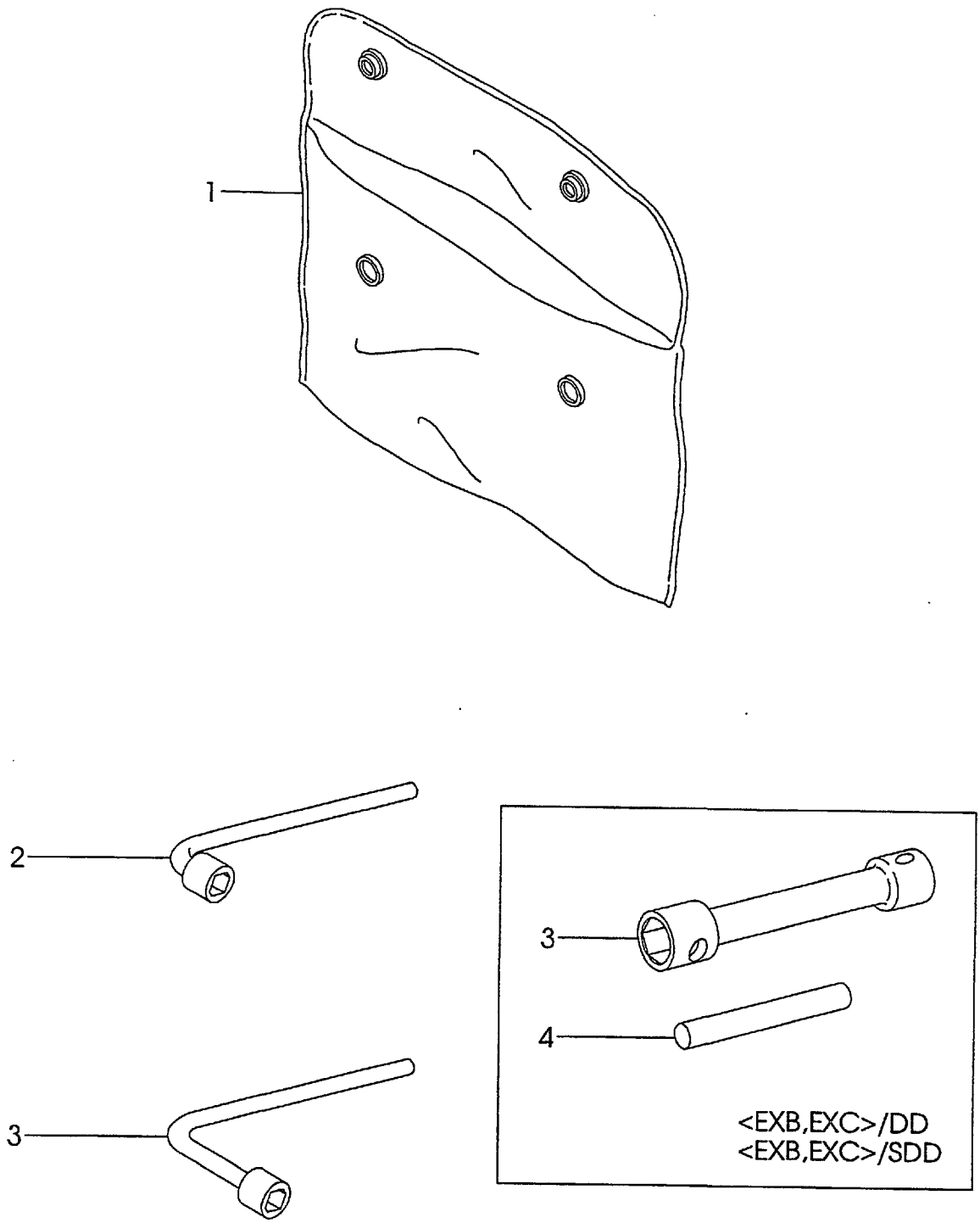

A:FG30C6 C:FD30C6
B:FG30T6 D:FD30T6

Fig.89
(F5039210)

Item No	Part No.	Mark	Description	Req'd	Remarks : Serial No.
1	214A9-20101		BAG,TOOL	1	[EXB][EXC]
2	22199-22251		WRENCH,21MM	1	[EXB][EXC](REAR)
3	24459-22011		WRENCH,32MM	1	[EXB][EXC](FRONT)
-	23819-20011		WRENCH	1	[EXB/DD][EXC/DD][EXB/SDD] [EXC/SDD](FRONT)
4	23819-20021		LEVER,WRENCH	1	[EXB/DD][EXC/DD][EXB/SDD] [EXC/SDD](FRONT)

Fig.90 FORK [VM39F]
(M5028120)

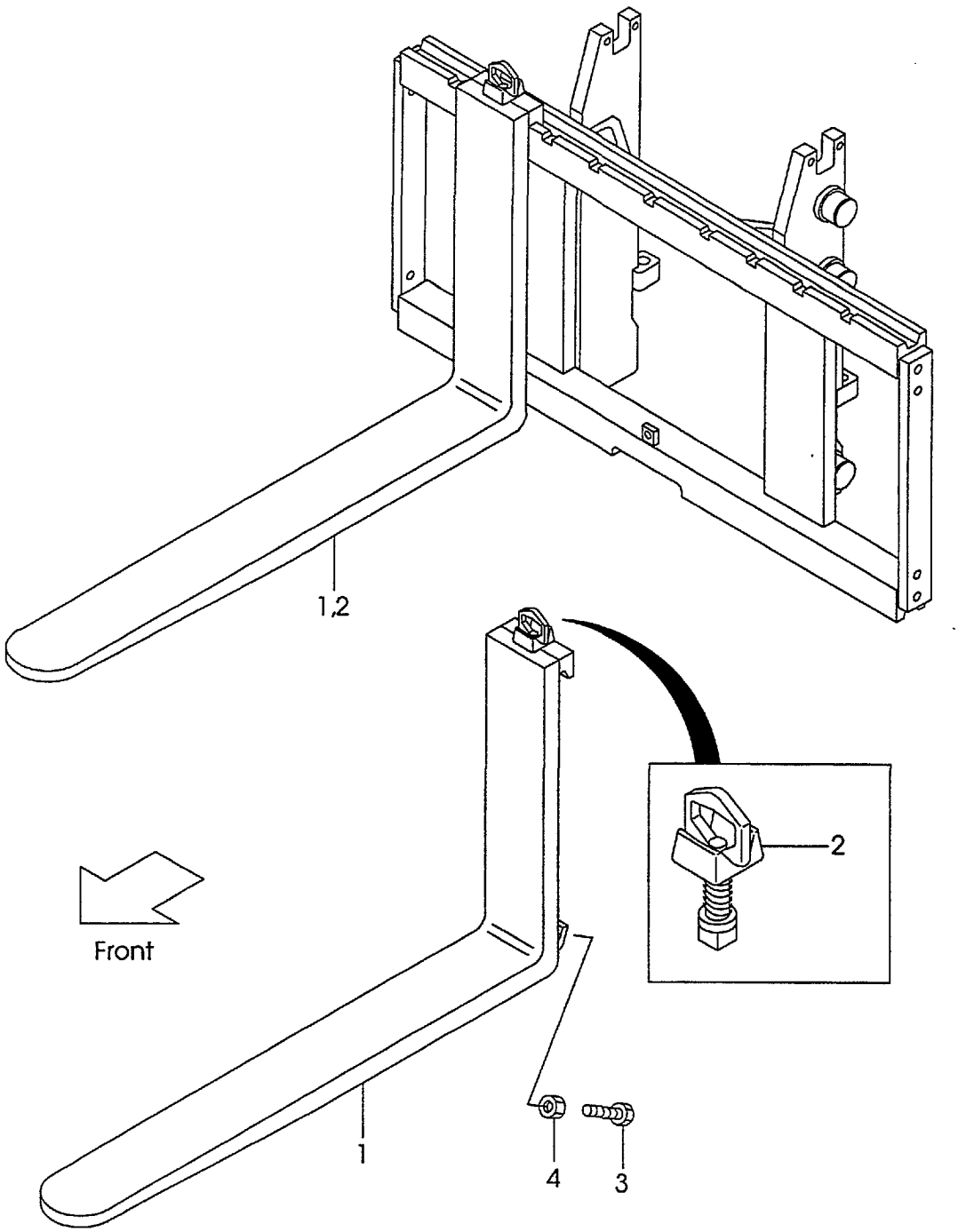

A:VM39F

Item No	Part No.	Mark	Description	Req'd	Remarks : Serial No.
1	214J8-10581		FORK	2	[LF100]INC.2
-	214J8-10501		FORK	2	[LF107][F107]]INC.2
-	214J8-10501		FORK	2	(L=1070)]INC.2
-	214J8-10591		FORK	2	[LF110]]INC.2
-	214J8-10601		FORK	2	[LF120]]INC.2
-	214J8-10511		FORK	2	[LF122][F122]]INC.2
-	214J8-10611		FORK	2	[LF130]]INC.2
-	214J8-10521		FORK	2	[LF137]]INC.2
-	214J8-10621		FORK	2	[LF140]]INC.2
-	214J8-10631		FORK	2	[LF150]]INC.2
-	214J8-10531		FORK	2	[LF152]]INC.2
-	214J8-10641		FORK	2	[LF160]]INC.2
-	214J8-10541		FORK	2	[LF167]]INC.2
-	214J8-10651		FORK	2	[LF170]]INC.2
-	214J8-10661		FORK	2	[LF180]]INC.2
-	214J8-10551		FORK	2	[LF182]]INC.2
-	214J8-10671		FORK	2	[LF190]]INC.2
-	214J8-10561		FORK	2	[LF197]]INC.2
-	214J8-10681		FORK	2	[LF200]]INC.2
-	214J8-10571		FORK	2	[LF212]]INC.2
-	234F8-10581		FORK	2	[LFD100]]INC.2
-	234F8-10501		FORK	2	[LFD107]]INC.2
-	234F8-10591		FORK	2	[LFD110]]INC.2
-	234F8-10601		FORK	2	[LFD120]]INC.2
-	234F8-10511		FORK	2	[LFD122]]INC.2
-	234F8-10611		FORK	2	[LFD130]]INC.2
-	234F8-10521		FORK	2	[LFD137]]INC.2
-	234F8-10621		FORK	2	[LFD140]]INC.2
-	234F8-10631		FORK	2	[LFD150]]INC.2
-	234F8-10531		FORK	2	[LFD152]]INC.2
-	234F8-10641		FORK	2	[LFD160]]INC.2
-	234F8-10541		FORK	2	[LFD167]]INC.2
-	234F8-10651		FORK	2	[LFD170]]INC.2
-	234F8-10661		FORK	2	[LFD180]]INC.2
-	234F8-10551		FORK	2	[LFD182]]INC.2
-	234F8-10671		FORK	2	[LFD190]]INC.2
-	234F8-10561		FORK	2	[LFD197]]INC.2
-	234F8-10681		FORK	2	[LFD200]]INC.2
-	234F8-10571		FORK	2	[LFD212]]INC.2
2	214J8-11002		STOPPER	2	
3	234F8-12101		BOLT	4	[LFD]
4	01402-00010		NUT	4	[LFD]

Fig.91 LIFT BRACKET [VM39F]

(M5028230)

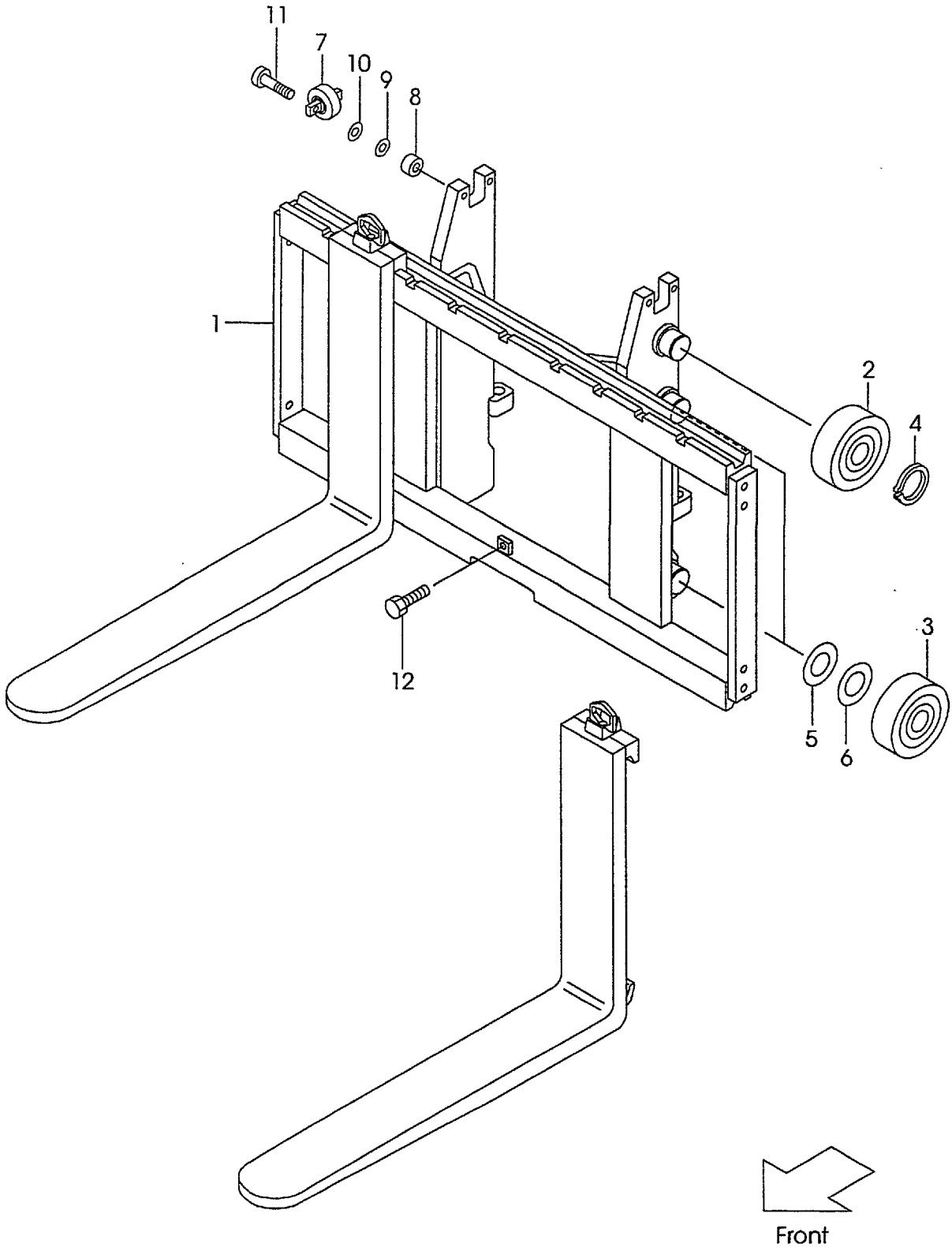

A:VM39F

Item No	Part No.	Mark	Description	Req'd	Remarks : Serial No.
1	239F8-20002		BRACKET,LIFT	1	
2	277P8-22051		ROLLER,END	2	
-	577P3-74001		ROLLER,END	2	[FC][FCS35][FCS55][CS35][CSA] [FCS45]
3	277P8-22051		ROLLER,END	4	
-	277P8-22061		ROLLER,END	(6)	
-	577P3-74001		ROLLER,END	4	[FC][FCS35][FCS55][CS35][CSA] [FCS45]
-	577P3-74011		ROLLER,END	(6)	[FC][FCS35][FCS55][CS35][CSA] [FCS45]
4	02100-00045		RING,SNAP	2	
5	277P8-22071		SHIM,T-0.5	5	
6	277P8-22081		SHIM,T-1.0	5	
7	23458-32052		ROLLER,SIDE	2	
-	514A3-71701		ROLLER,SIDE	2	[FC][FCS35][FCS55][CS35][CSA] [FCS45]
8	22548-34031		SPACER	4	
9	22548-34051		SHIM	5	
10	22548-34061		SHIM	5	
11	01184-12050		BOLT & WASHER	4	
-	01184-12040		BOLT & WASHER	4	[FC][FCS35][FCS55][CS35][CSA] [FCS45]
12	01184-12025		BOLT & WASHER	1	

Fig.92 BACKREST [VM39F]
(M5028240)

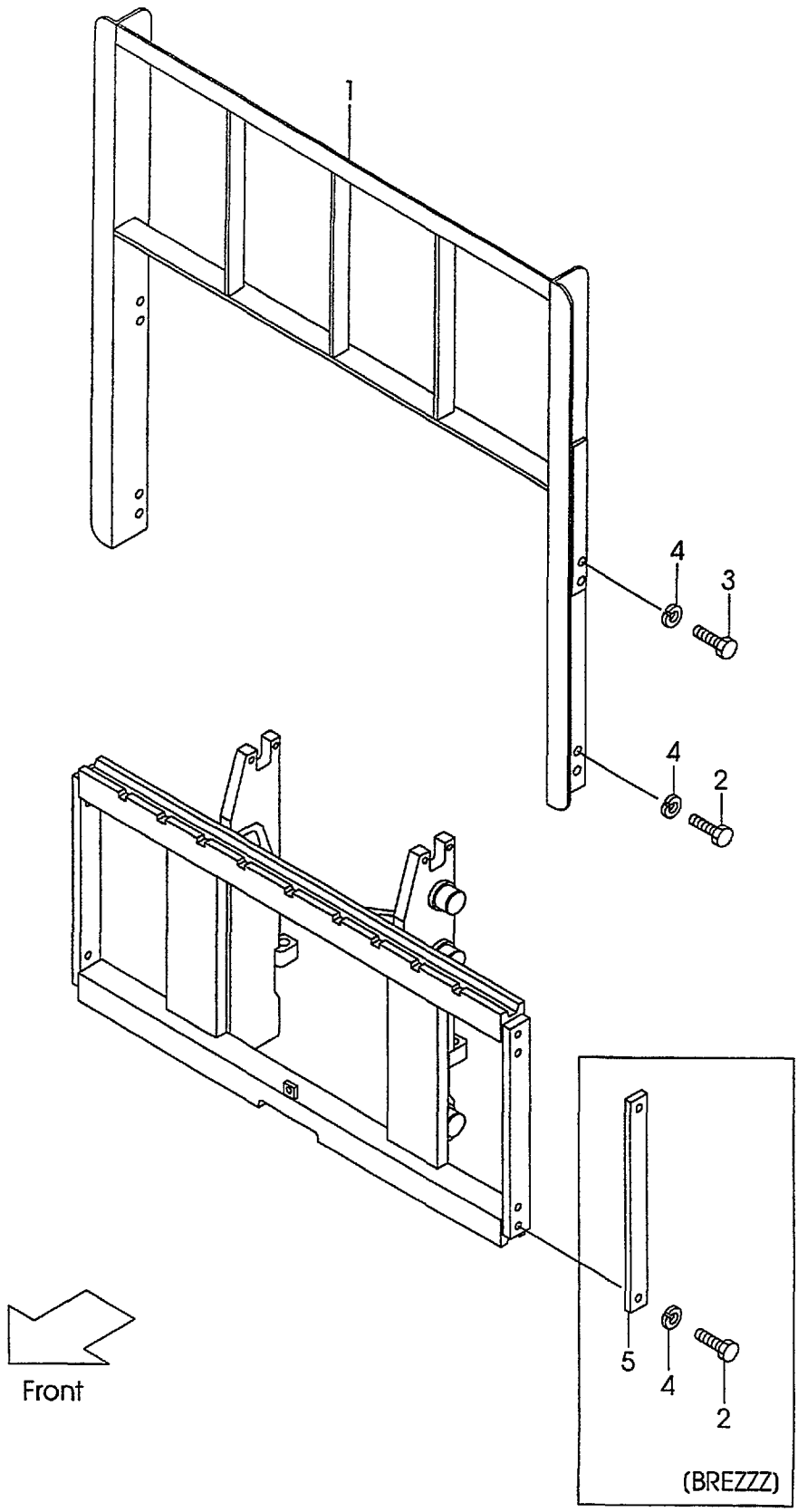

A:VM39F

Item No	Part No.	Mark	Description	Req'd	Remarks : Serial No.
1	234F8-22201		REST,BACK	1	
2	01100-14025		BOLT	4	
-	01100-14025		BOLT	4	[BREZZZ]
3	01100-14030		BOLT	4	(WITHOUT BREZZZ)
4	02010-00014		WASHER	8	
-	02010-00014		WASHER	4	[BREZZZ]
5	24450-92021		PLATE	2	[BREZZZ]

Fig.93 MAST [VM39F]
(M5028320)

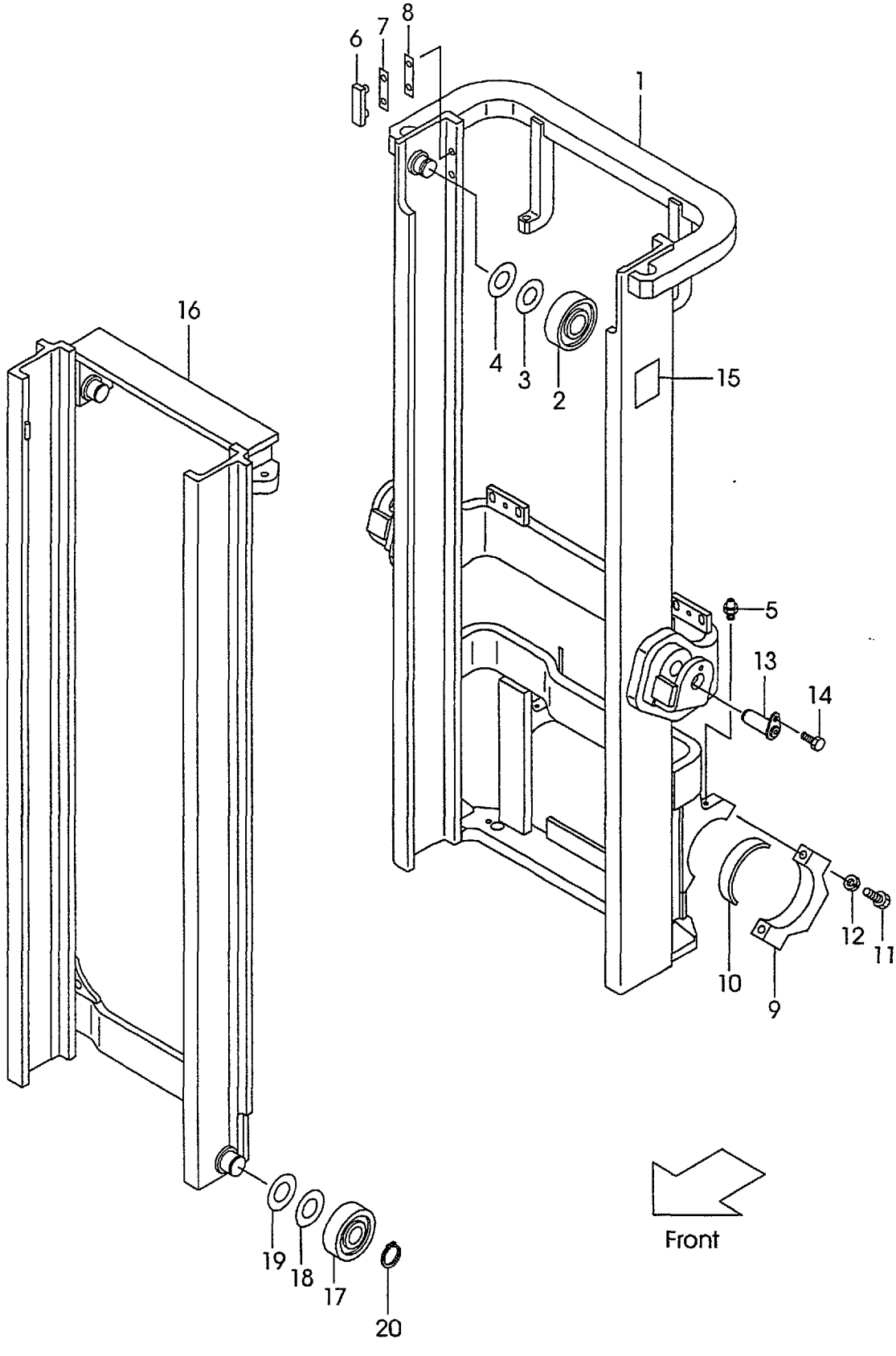

A:VM39F

Item No	Part No.	Mark	Description	Req'd	Remarks : Serial No.
1	239F8-30012		MAST,OUTER VM200	1	
-	239F8-30022		MAST,OUTER VM225	1	
-	239F8-30032		MAST,OUTER VM250	1	
-	239F8-30042		MAST,OUTER VM270	1	
-	239F8-30052		MAST,OUTER VM275	1	
-	239F8-30002		MAST,OUTER VM300	1	
-	239F8-30062		MAST,OUTER VM325	1	
-	239F8-30072		MAST,OUTER VM330	1	
-	239F8-30082		MAST,OUTER VM350	1	
-	239F8-30092		MAST,OUTER VM366	1	
-	239F8-30102		MAST,OUTER VM370	1	
-	239F8-30112		MAST,OUTER VM375	1	
-	239F8-30122		MAST,OUTER VM400	1	
-	239F8-30132		MAST,OUTER VM425	1	
-	239F8-30142		MAST,OUTER VM450	1	
-	239F8-30152		MAST,OUTER VM475	1	
-	239F8-30162		MAST,OUTER VM500	1	
-	239F8-30172		MAST,OUTER VM550	1	
-	239F8-30182		MAST,OUTER VM600	1	
2	277P8-22051		ROLLER,END	2	
-	577P3-74001		ROLLER,END	2	[FC][FCS35][FCS55][CS35][CSA] [FCS45]
3	277P8-22071		SHIM,T-0.5	12	
4	277P8-22081		SHIM,T-1.0	12	
5	04901-00100		FITTING	2	
6	216G8-33401		SLIPPER	2	
7	216G8-33361		SHIM,T-0.5	8	
8	216G8-33371		SHIM,T-1.0	4	
9	22018-30065		CAP	2	
10	214A8-02201		BUSHING	2	
11	01103-16065		BOLT	4	
12	02011-00016		WASHER	4	
13	234A8-02001		PIN	2	
14	216G8-52301		BOLT & WASHER	2	
15	23678-06002		PLATE,NAME	1	
16	239F8-30212		MAST,INNER VM200	1	
-	239F8-30222		MAST,INNER VM225	1	
-	239F8-30232		MAST,INNER VM250	1	
-	239F8-30242		MAST,INNER VM270	1	
-	239F8-30252		MAST,INNER VM275	1	
-	239F8-30202		MAST,INNER VM300	1	
-	239F8-30262		MAST,INNER VM325	1	
-	239F8-30272		MAST,INNER VM330	1	
-	239F8-30282		MAST,INNER VM350	1	
-	239F8-30292		MAST,INNER VM366	1	
-	239F8-30302		MAST,INNER VM370	1	
-	239F8-30312		MAST,INNER VM375	1	
-	239F8-30322		MAST,INNER VM400	1	
-	239F8-30332		MAST,INNER VM425	1	
-	239F8-30342		MAST,INNER VM450	1	

Fig.93 MAST [VM39F]
(M5028320)

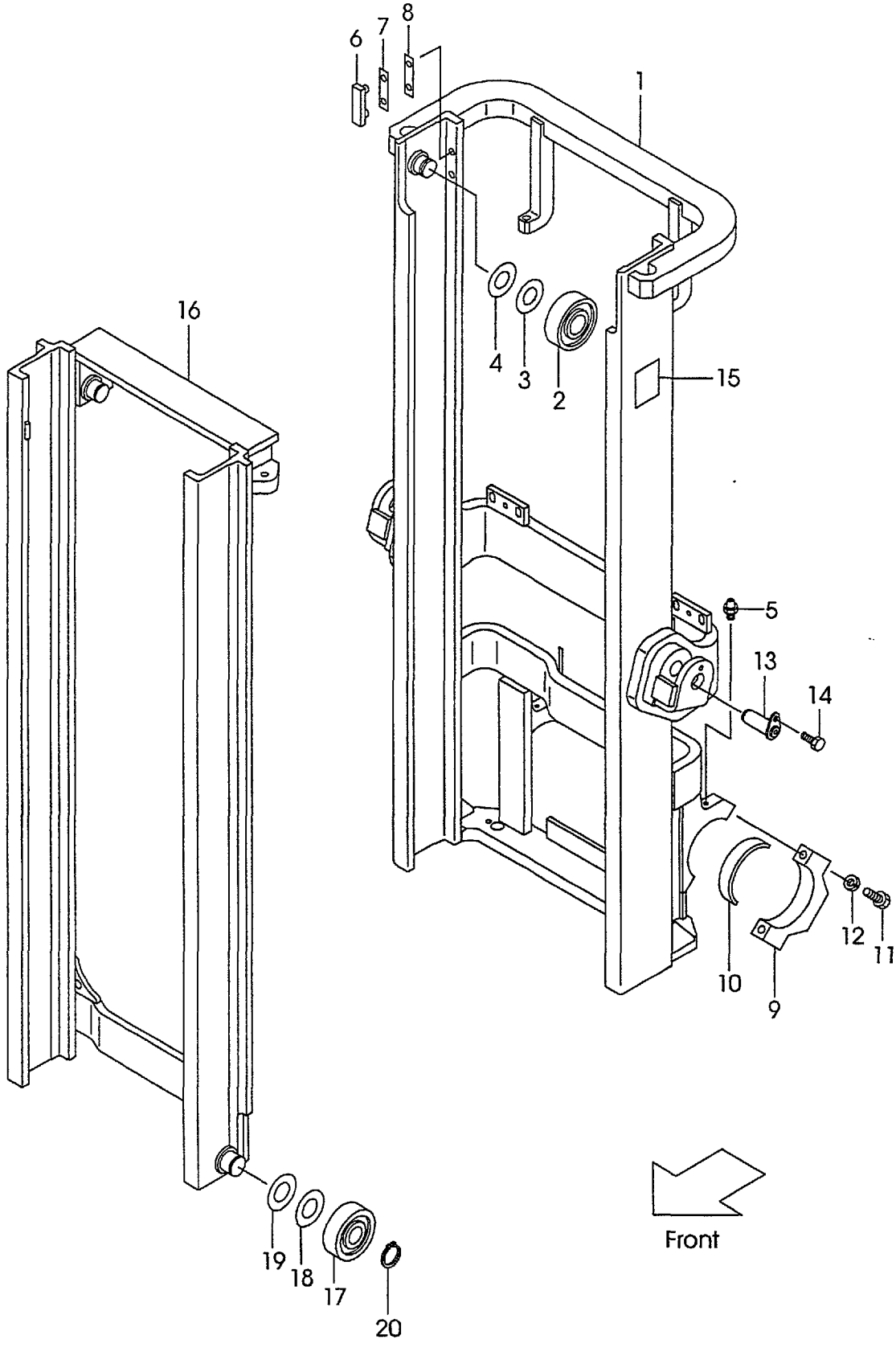

A:VM39F

Item No	Part No.	Mark	Description	Req'd	Remarks : Serial No.
-	239F8-30352		MAST,INNER VM475	1	
-	239F8-30362		MAST,INNER VM500	1	
-	239F8-30372		MAST,INNER VM550	1	
-	239F8-30382		MAST,INNER VM600	1	
17	277P8-22051		ROLLER,END	2	
-	277P8-22061		ROLLER,END	(2)	
-	577P3-74001		ROLLER,END	2	[FC][FCS35][FCS55][CS35] [FCS45]
-	577P3-74011		ROLLER,END	(2)	[FC][FCS35][FCS55][CS35] [FCS45]
18	277P8-22071		SHIM,T-0.5	12	
19	277P8-22081		SHIM,T-1.0	12	
20	09192-30044		RING,SNAP	2	

Fig.94 LIFT CYLINDER [VM39F]

(M5028430)

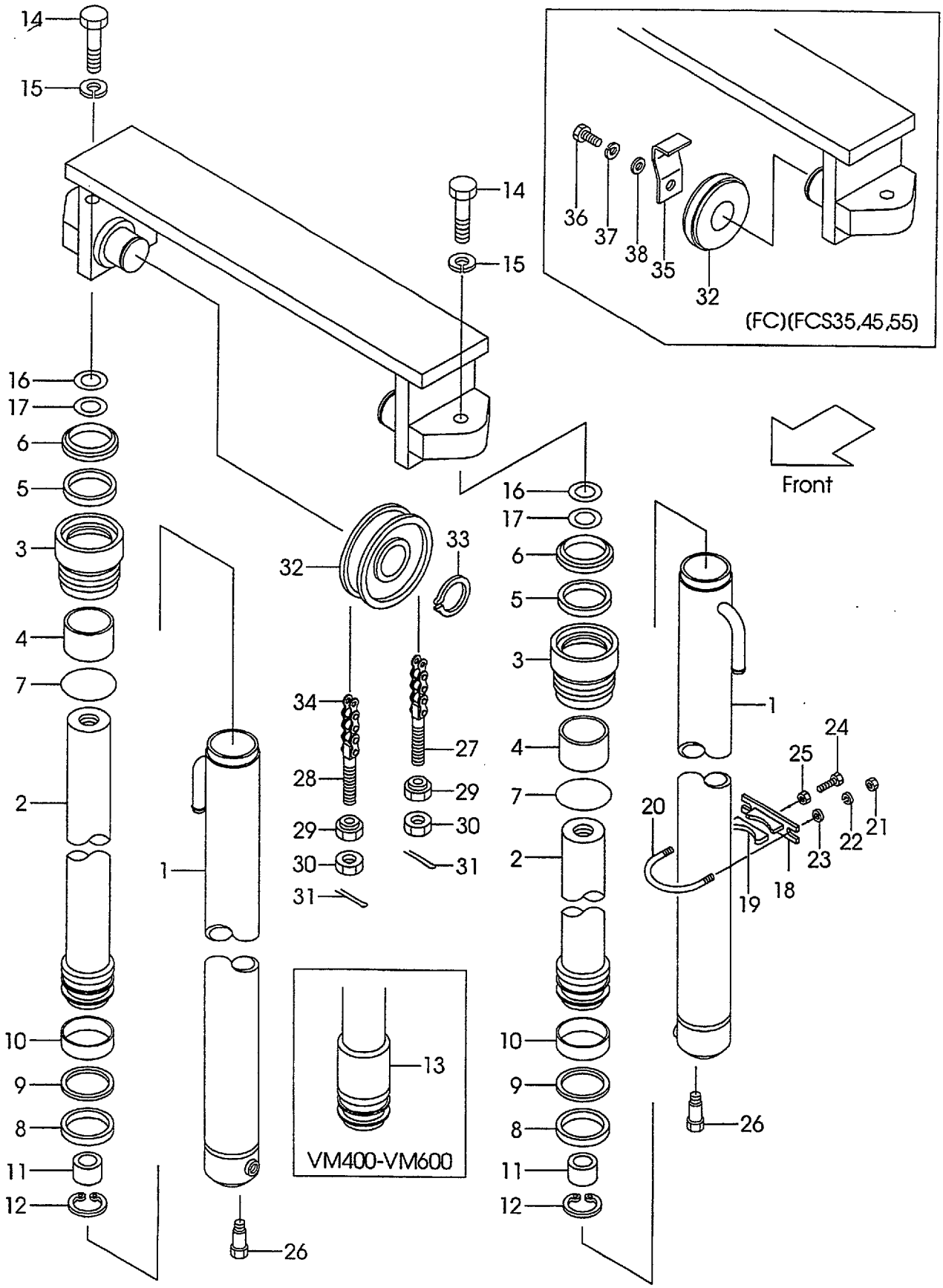

A:VM39F

Item No	Part No.	Mark	Description	Req'd	Remarks : Serial No.
A1	277T8-40011		CYL-ASSY,LIFT VM200	2	INC.1-12
-	277T8-40021		CYL-ASSY,LIFT VM225	2	INC.1-12
-	277T8-40031		CYL-ASSY,LIFT VM250	2	INC.1-12
-	277T8-40041		CYL-ASSY,LIFT VM270	2	INC.1-12
-	277T8-40051		CYL-ASSY,LIFT VM275	2	INC.1-12
-	277T8-40001		CYL-ASSY,LIFT VM300	2	INC.1-12
-	277T8-40061		CYL-ASSY,LIFT VM325	2	INC.1-12
-	277T8-40071		CYL-ASSY,LIFT VM330	2	INC.1-12
-	277T8-40081		CYL-ASSY,LIFT VM350	2	INC.1-12
-	277T8-40091		CYL-ASSY,LIFT VM366	2	INC.1-12
-	277T8-40101		CYL-ASSY,LIFT VM370	2	INC.1-12
-	277T8-40111		CYL-ASSY,LIFT VM375	2	INC.1-12
-	277T8-40121		CYL-ASSY,LIFT VM400	2	INC.1-13
-	277T8-40131		CYL-ASSY,LIFT VM425	2	INC.1-13
-	277T8-40141		CYL-ASSY,LIFT VM450	2	INC.1-13
-	277T8-40151		CYL-ASSY,LIFT VM475	2	INC.1-13
-	277T8-40161		CYL-ASSY,LIFT VM500	2	INC.1-13
-	277T8-40171		CYL-ASSY,LIFT VM550	2	INC.1-13
-	277T8-40181		CYL-ASSY,LIFT VM600	2	INC.1-13
1	B-30697-54101		BODY,CYL VM200	2	
-	B-30697-54201		BODY,CYL VM225	2	
-	B-30697-54301		BODY,CYL VM250	2	
-	B-30697-54401		BODY,CYL VM270	2	
-	B-30697-54501		BODY,CYL VM275	2	
-	B-30697-54601		BODY,CYL VM300	2	
-	B-30697-54701		BODY,CYL VM325	2	
-	B-30697-54801		BODY,CYL VM330	2	
-	B-30697-54901		BODY,CYL VM350	2	
-	B-30697-55001		BODY,CYL VM366	2	
-	B-30697-55101		BODY,CYL VM370	2	
-	B-30697-55201		BODY,CYL VM375	2	
-	B-30697-55301		BODY,CYL VM400	2	
-	B-30697-55401		BODY,CYL VM425	2	
-	B-30697-55501		BODY,CYL VM450	2	
-	B-30697-55601		BODY,CYL VM475	2	
-	B-30697-55701		BODY,CYL VM500	2	
-	B-30697-55801		BODY,CYL VM550	2	
-	B-30697-55901		BODY,CYL VM600	2	
2	B-30697-54102		ROD,PISTON VM200	2	
-	B-30697-54202		ROD,PISTON VM225	2	
-	B-30697-54302		ROD,PISTON VM250	2	
-	B-30697-54402		ROD,PISTON VM270	2	
-	B-30697-54502		ROD,PISTON VM275	2	
-	B-30697-54602		ROD,PISTON VM300	2	
-	B-30697-54702		ROD,PISTON VM325	2	
-	B-30697-54802		ROD,PISTON VM330	2	
-	B-30697-54902		ROD,PISTON VM350	2	
-	B-30697-55002		ROD,PISTON VM366	2	
-	B-30697-55102		ROD,PISTON VM370	2	
-	B-30697-55202		ROD,PISTON VM375	2	

Fig.94 LIFT CYLINDER [VM39F]

(M5028430)

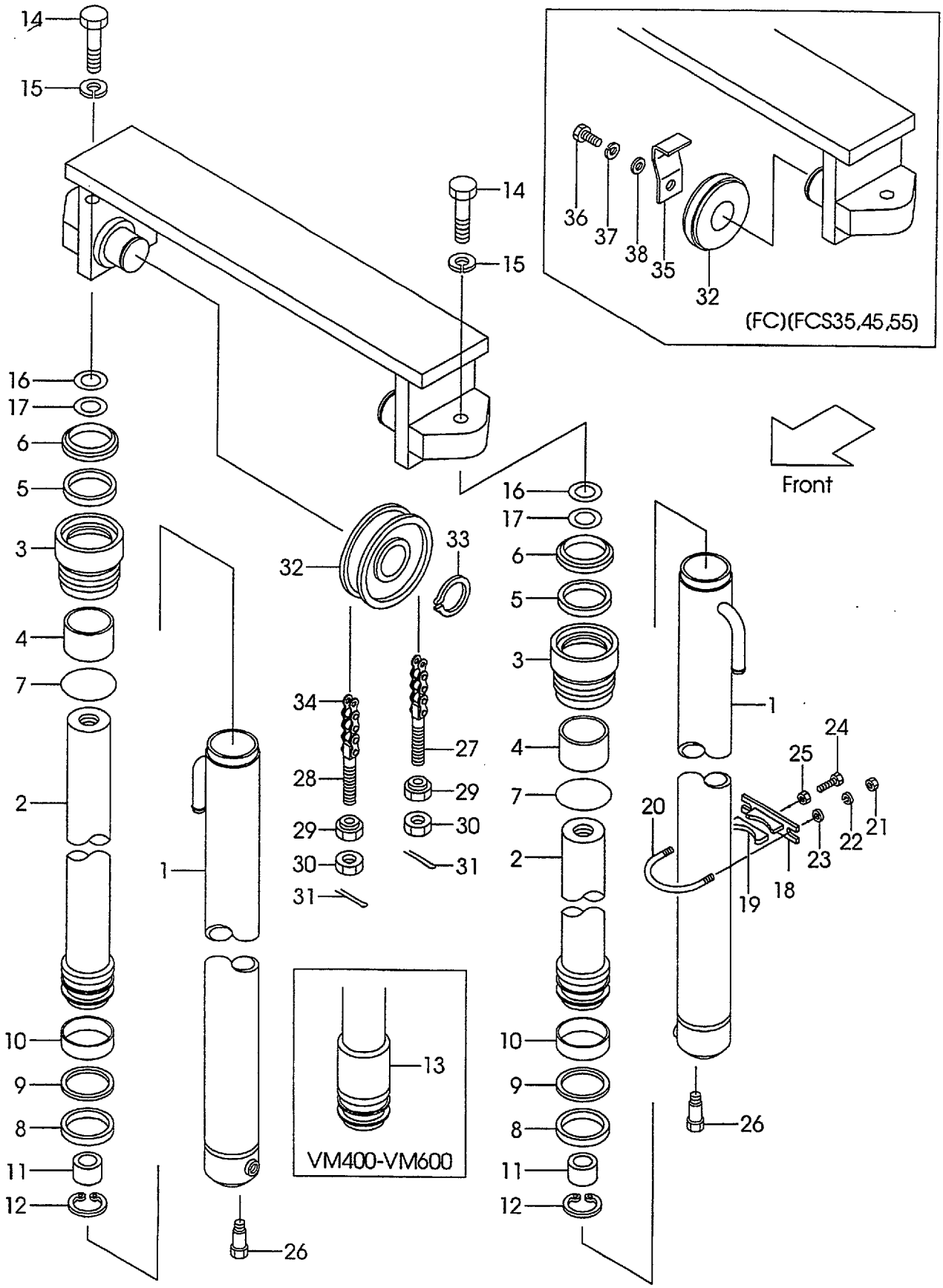

A:VM39F

Item No	Part No.	Mark	Description	Req'd	Remarks : Serial No.
-	B-30697-55302		ROD,PISTON VM400	2	
-	B-30697-55402		ROD,PISTON VM425	2	
-	B-30697-55502		ROD,PISTON VM450	2	
-	B-30697-55602		ROD,PISTON VM475	2	
-	B-30697-55702		ROD,PISTON VM500	2	
-	B-30697-55802		ROD,PISTON VM550	2	
-	B-30697-55902		ROD,PISTON VM600	2	
3	B-30121-55043	*	CAP	2	
4	B-30131-45017	*	BUSHING	2	
5	B-30961-04512	*	U-RING	2	
6	B-30191-45025	*	WIPER	2	
7	B-30161-91775	*	O-RING	2	
8	B-30161-55046	*	U-RING	2	
9	B-30461-55039	*	RING,BACK-UP	2	
10	B-30131-55018		BUSHING	2	
11	B-30551-91001		RING	2	
12	B-30141-91048		RING,SNAP	2	
13	B-30296-72103		SPACER VM400	2	
-	B-30296-72103		SPACER VM425	2	
-	B-30296-72103		SPACER VM450	2	
-	B-30296-72103		SPACER VM475	2	
-	B-30296-72103		SPACER VM500	2	
-	B-30046-67103		SPACER VM550	2	
-	B-30046-67103		SPACER VM600	2	
14	01103-14040		BOLT	2	
15	02011-00014		WASHER	2	
16	22517-40051		SHIM	4	
17	22717-40081		SHIM	4	
A2	215E8-42171		SUPPORT-ASSY	2	INC.18,19
18	215E8-42181		SUPPORT	2	
19	24868-42111		RUBBER	2	
20	234A8-42551		U-BOLT	2	
21	234A8-42561		NUT	4	
22	02010-20010		WASHER	4	
23	02000-20010		WASHER	4	
24	232A8-42201		BOLT	2	
25	234A8-42571		NUT	2	
26	214A8-42661		BOLT	2	
27	215K0-82701		PIN,ANCHOR	2	
-	23658-42531		PIN,ANCHOR	2	[FC][FCS35][FCS45][FCS55]
28	24459-42391		PIN,ANCHOR	2	
-	22218-42111		PIN,ANCHOR	2	[FC][FCS35][FCS45][FCS55]
29	22218-40191		NUT	4	
30	01400-00018		NUT	4	
31	02200-03040		PIN	4	
32	234A8-43501		SHEAVE	2	
-	22208-40031		SHEAVE	2	[FC][FCS35][FCS45][FCS55]
33	02100-00040		RING,SNAP	2	
34	22438-45551		CHAIN VM200	2	
-	22438-45591		CHAIN VM225	2	

Fig.94 LIFT CYLINDER [VM39F]

(M5028430)

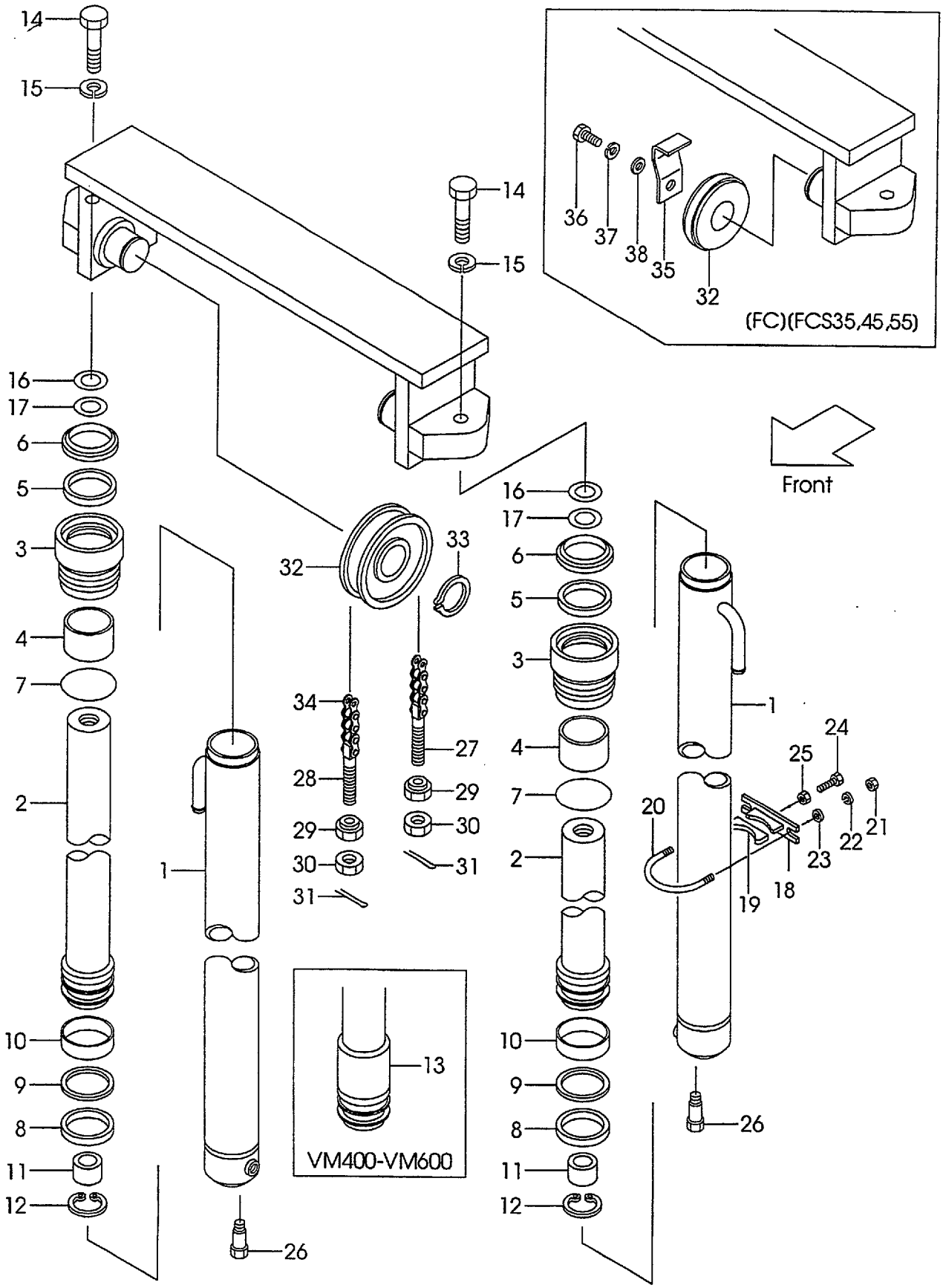

A:VM39F

Item No	Part No.	Mark	Description	Req'd	Remarks : Serial No.
-	22438-45651		CHAIN VM250	2	
-	22438-45691		CHAIN VM270	2	
-	22438-45691		CHAIN VM275	2	
-	22438-45751		CHAIN VM300	2	
-	22438-45791		CHAIN VM325	2	
-	22438-45811		CHAIN VM330	2	
-	22438-45851		CHAIN VM350	2	
-	22438-45871		CHAIN VM366	2	
-	22438-45891		CHAIN VM370	2	
-	22438-45891		CHAIN VM375	2	
-	22438-45971		CHAIN VM400	2	
-	22438-46011		CHAIN VM425	2	
-	22438-46071		CHAIN VM450	2	
-	22438-46111		CHAIN VM475	2	
-	22438-46151		CHAIN VM500	2	
-	22438-46271		CHAIN VM550	2	
-	22438-46371		CHAIN VM600	2	
-	09001-10045		CHAIN VM200	2	[FC][FCS35][FCS45][FCS55]
-	09001-10049		CHAIN VM225	2	[FC][FCS35][FCS45][FCS55]
-	09001-10051		CHAIN VM250	2	[FC][FCS35][FCS45][FCS55]
-	09001-10055		CHAIN VM270	2	[FC][FCS35][FCS45][FCS55]
-	09001-10055		CHAIN VM275	2	[FC][FCS35][FCS45][FCS55]
-	09001-10059		CHAIN VM300	2	[FC][FCS35][FCS45][FCS55]
-	09001-10063		CHAIN VM325	2	[FC][FCS35][FCS45][FCS55]
-	09001-10065		CHAIN VM330	2	[FC][FCS35][FCS45][FCS55]
-	09001-10067		CHAIN VM350	2	[FC][FCS35][FCS45][FCS55]
-	09001-10071		CHAIN VM366	2	[FC][FCS35][FCS45][FCS55]
-	09001-10071		CHAIN VM370	2	[FC][FCS35][FCS45][FCS55]
-	09001-10071		CHAIN VM375	2	[FC][FCS35][FCS45][FCS55]
-	09001-10077		CHAIN VM400	2	[FC][FCS35][FCS45][FCS55]
-	09001-10081		CHAIN VM425	2	[FC][FCS35][FCS45][FCS55]
-	09001-10085		CHAIN VM450	2	[FC][FCS35][FCS45][FCS55]
-	09001-10089		CHAIN VM475	2	[FC][FCS35][FCS45][FCS55]
-	09001-10093		CHAIN VM500	2	[FC][FCS35][FCS45][FCS55]
-	09001-10103		CHAIN VM550	2	[FC][FCS35][FCS45][FCS55]
-	09001-10111		CHAIN VM600	2	[FC][FCS35][FCS45][FCS55]
35	514J3-74061		STOPPER	2	[FC][FCS35][FCS45][FCS55]
36	01100-16025		BOLT	2	[FC][FCS35][FCS45][FCS55]
37	02010-00016		WASHER	2	[FC][FCS35][FCS45][FCS55]
38	02000-00016		WASHER	2	[FC][FCS35][FCS45][FCS55]
K1	B-3055B-00097		CAP,CYL	2	INC.3,4
K2	B-3055A-00058		KIT,REPAIR	2	INC.5-9

Fig.95 MAST PIPING [VM39F]
(M5028440)

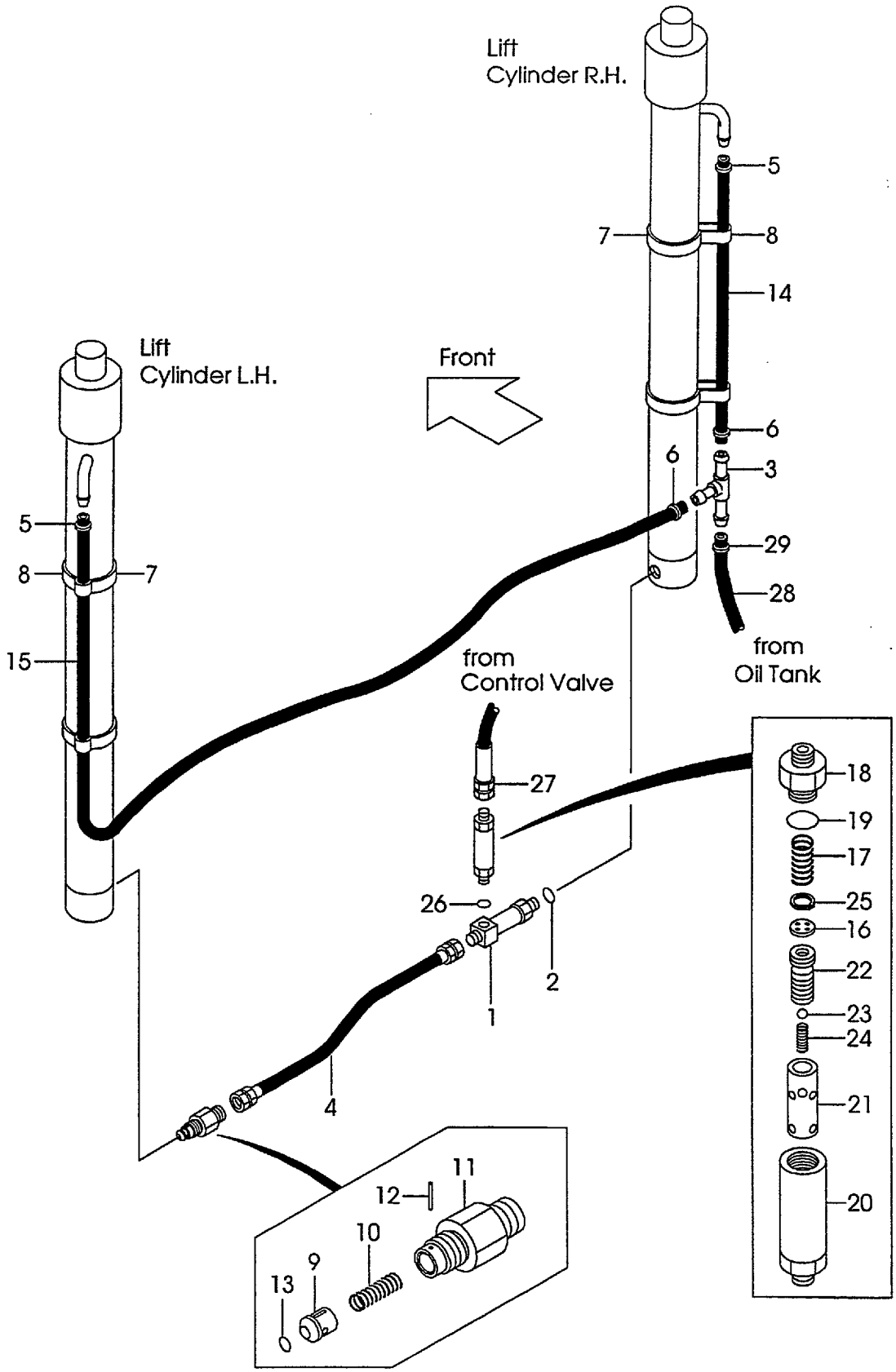

A:VM39F

Item No	Part No.	Mark	Description	Req'd	Remarks : Serial No.
A1	234A8-41101		THREE-WAY	1	INC.1,2
1	NO PART NO.	#	THREE-WAY	1	
2	03320-00140		O-RING	1	
3	23679-45051		THREE-WAY	1	
-	53675-55051		THREE-WAY	1	[FC][RTL]
4	234A8-02201		HOSE	1	
5	04911-00018		CLIP	2	
-	24329-46201		CLIP	2	[FC][RTL]
6	04911-00018		CLIP	2	
-	04911-00021		CLIP	2	[FC][RTL]
7	04913-21380		BAND	4	
8	23678-42401		BAND,HOSE	4	
-	53675-54101		BAND	4	[FC][RTL]
A2	234A8-40701		VALVE,CUT	1	INC.9-13
9	234A8-42602		PISTON	1	
10	234A8-42611		SPRING	1	
11	234A8-42622		NIPPLE	1	
12	02270-01014		PIN	1	
13	03320-00140		O-RING	1	
14	23678-40060		HOSE VM200	1	
-	23678-40070		HOSE VM225	1	
-	23678-40085		HOSE VM250	1	
-	23678-40095		HOSE	1	[VM270][VM275]
-	23678-40110		HOSE VM300	1	
-	23678-40120		HOSE VM325	1	
-	23678-40125		HOSE VM330	1	
-	23678-40135		HOSE VM350	1	
-	23678-40145		HOSE	1	[VM366-375]
-	23678-40165		HOSE VM400	1	
-	23678-40175		HOSE VM425	1	
-	23678-40190		HOSE VM450	1	
-	23678-40200		HOSE VM475	1	
-	23678-40215		HOSE VM500	1	
-	23678-40245		HOSE VM550	1	
-	23678-40270		HOSE VM600	1	
-	04710-04060		HOSE VM200	1	[FC][RTL]
-	04710-04070		HOSE VM225	1	[FC][RTL]
-	04710-04085		HOSE VM250	1	[FC][RTL]
-	04710-04095		HOSE	1	[VM270][VM275][FC][RTL]
-	04710-04110		HOSE VM300	1	[FC][RTL]
-	04710-04120		HOSE VM325	1	[FC][RTL]
-	04710-04125		HOSE VM330	1	[FC][RTL]
-	04710-04135		HOSE VM350	1	[FC][RTL]
-	04710-04145		HOSE	1	[VM366-375][FC][RTL]
-	04710-04165		HOSE VM400	1	[FC][RTL]
-	04710-04175		HOSE VM425	1	[FC][RTL]
-	04710-04190		HOSE VM450	1	[FC][RTL]
-	04710-04200		HOSE VM475	1	[FC][RTL]
-	04710-04215		HOSE VM500	1	[FC][RTL]
-	04710-04245		HOSE VM550	1	[FC][RTL]

Fig.95 MAST PIPING [VM39F]
(M5028440)

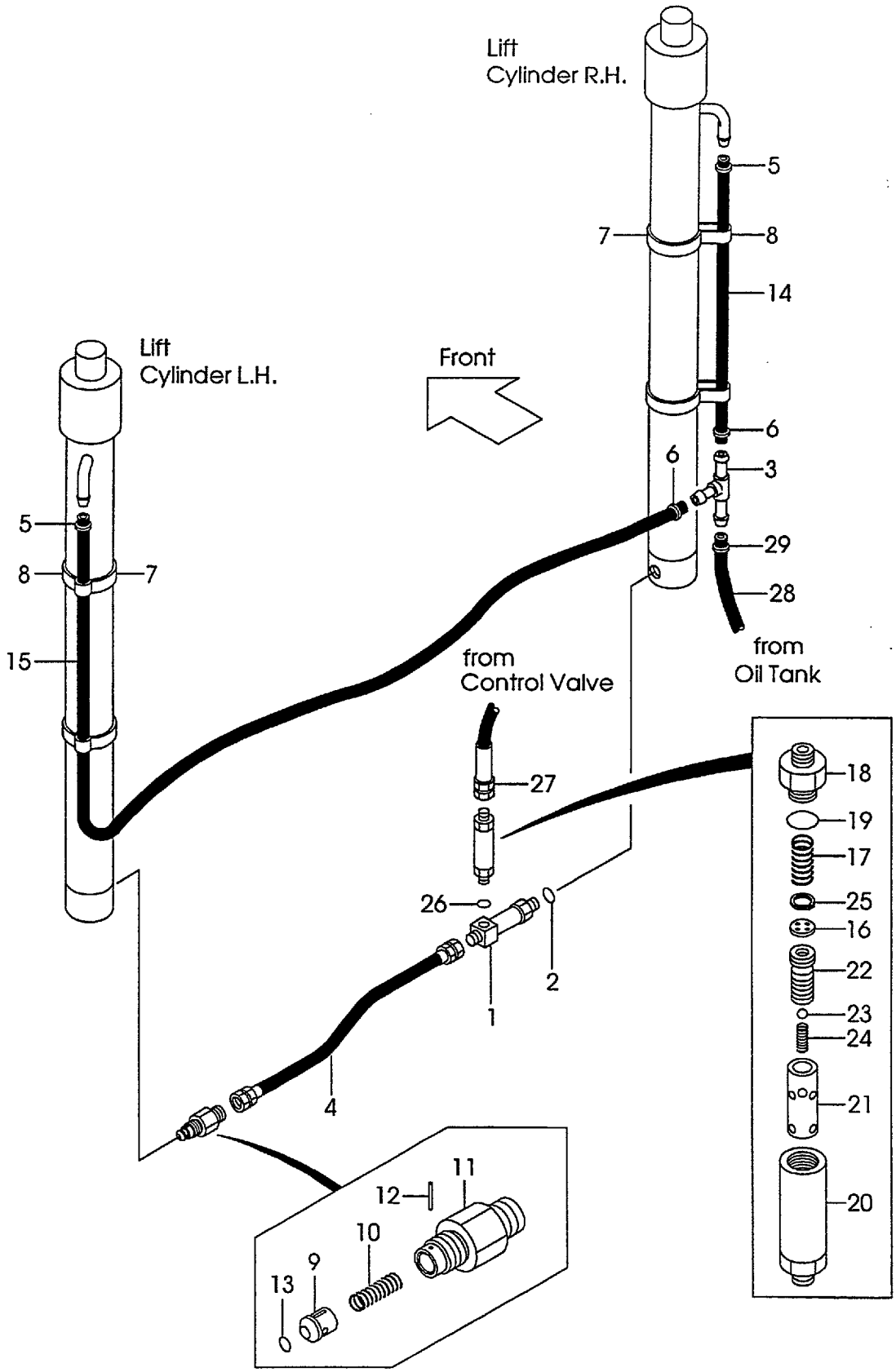

A:VM39F

Item No	Part No.	Mark	Description	Req'd	Remarks : Serial No.
-	04710-04270		HOSE VM600	1	[FC][RTL]
15	23678-40125		HOSE VM200	1	
-	23678-40145		HOSE VM225	1	
-	23678-40150		HOSE VM250	1	
-	23678-40160		HOSE	1	[VM270][VM275]
-	23678-40170		HOSE VM300	1	
-	23678-40185		HOSE VM325	1	
-	23678-40190		HOSE VM330	1	
-	23678-40200		HOSE VM350	1	
-	23678-40210		HOSE	1	[VM366-375]
-	23678-40230		HOSE VM400	1	
-	23678-40240		HOSE VM425	1	
-	23678-40255		HOSE VM450	1	
-	23678-40265		HOSE VM475	1	
-	23678-40280		HOSE VM500	1	
-	23678-40310		HOSE VM550	1	
-	23678-40335		HOSE VM600	1	
-	04710-04125		HOSE VM200	1	[FC][RTL]
-	04710-04145		HOSE VM225	1	[FC][RTL]
-	04710-04150		HOSE VM250	1	[FC][RTL]
-	04710-04160		HOSE	1	[VM270][VM275][FC][RTL]
-	04710-04170		HOSE VM300	1	[FC][RTL]
-	04710-04185		HOSE VM325	1	[FC][RTL]
-	04710-04190		HOSE VM330	1	[FC][RTL]
-	04710-04200		HOSE VM350	1	[FC][RTL]
-	04710-04210		HOSE	1	[VM366-375][FC][RTL]
-	04710-04230		HOSE VM400	1	[FC][RTL]
-	04710-04240		HOSE VM425	1	[FC][RTL]
-	04710-04255		HOSE VM450	1	[FC][RTL]
-	04710-04265		HOSE VM475	1	[FC][RTL]
-	04710-04280		HOSE VM500	1	[FC][RTL]
-	04710-04310		HOSE VM550	1	[FC][RTL]
-	04710-04335		HOSE VM600	1	[FC][RTL]
A3	234F8-41001		REGULATOR	1	INC.18-27
16	NO PART NO.	#	PLATE	1	
17	27979-43101		SPRING	1	
18	NO PART NO.	#	NIPPLE	1	
19	03320-00280		O-RING	1	
20	NO PART NO.	#	CASE	1	
21	NO PART NO.	#	SLEEVE	1	
22	NO PART NO.	#	PISTON	1	
23	24459-42951		BALL,NYLON	1	
24	214A8-44151		SPRING	1	
25	02110-00018		RING,SNAP	1	
26	03320-00180		O-RING	1	
27	234A8-02101		HOSE	1	
28	23678-40110		HOSE	1	
-	04710-04125		HOSE	1	[FC][RTL]
29	04911-00018		CLIP	1	
-	04914-00016		CLIP	1	

Fig.95 MAST PIPING [VM39F]
(M5028440)

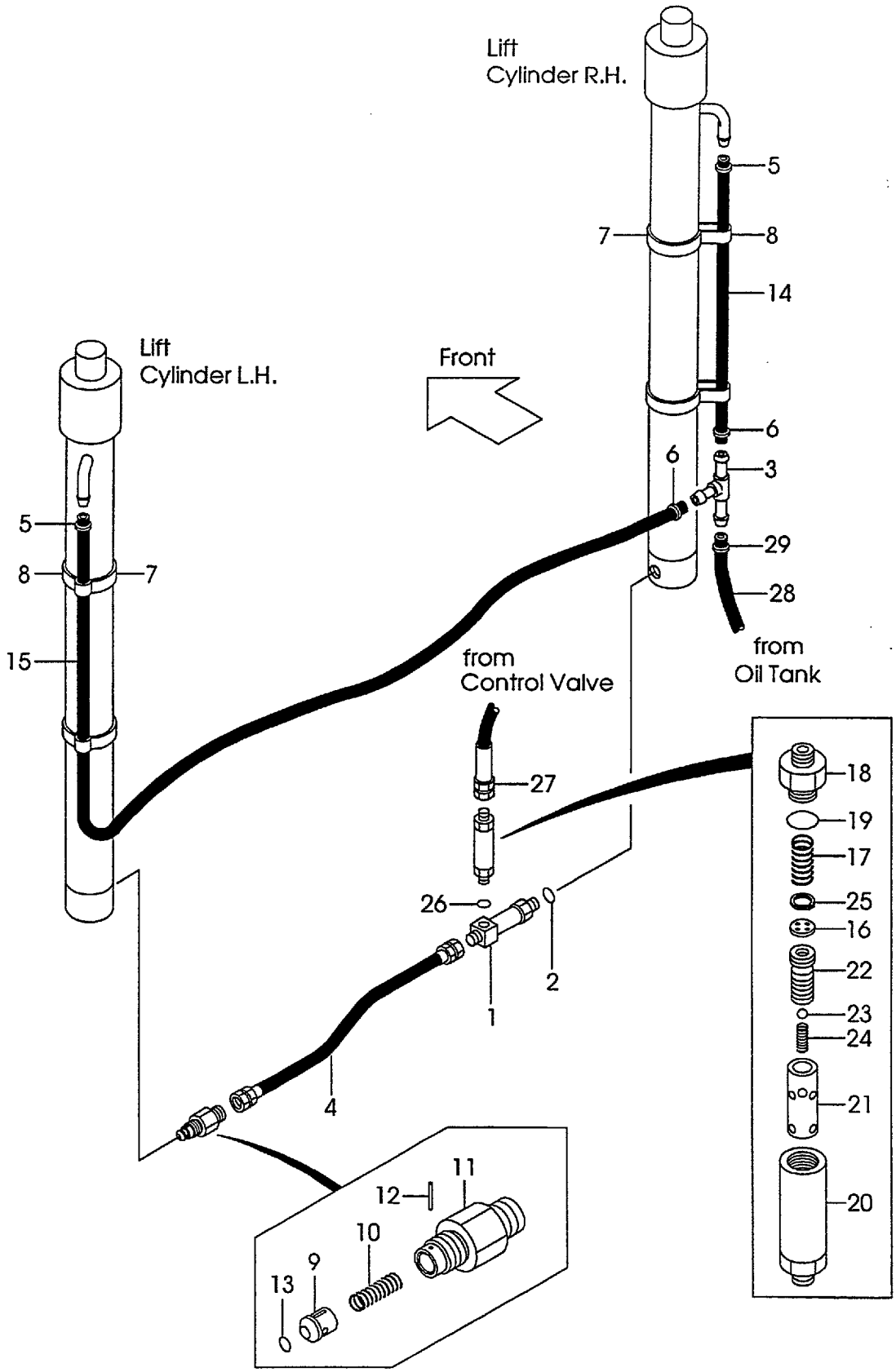

Fig.95
(M5028440)

A:VM39F

Item No	Part No.	Mark	Description	Req'd	Remarks : Serial No.
-	04911-00021		CLIP	2	[FC][RTL]

PARTS NUMBER INDEX

Part No.	Fig.No.	Part No.	Fig.No.	Part No.	Fig.No.	Part No.	Fig.No.
B-B6127-20612	85	B-30161-55046	94	B-3070A-00103	85	C-52-11242-24500	31
B-B6127-20612	85	B-30161-91775	94	B-3070A-00103	85	C-52-11242-24530	31
B-B6341-01401	85	B-30191-30025	85	B-30961-03012	85	C-52-11242-52380	31
B-B6341-01401	85	B-30191-30025	85	B-30961-03012	85	C-52-11242-52380	31
B-B6351-01401	85	B-30191-45025	94	B-30961-04512	94	C-52-11242-54010	31
B-B6351-01401	85	B-30296-72103	94	B-91111-60102	73	C-52-11242-54011	31
B-B670B-00086	85	B-30296-72103	94	B-91111-60102	74	C-52-11246-11000	31
B-B670B-00087	85	B-30296-72103	94	B-91511-08180	72	C-52-11246-21000	31
B-21001-00036	71	B-30296-72103	94	B-92703-06181	72	C-52-11246-52001	31
B-21001-00106	72	B-30296-72103	94	B-92703-06181	73	C-52-11246-52001	31
B-21001-00106	73	B-30311-01403	85	B-92703-06181	74	C-52-11246-54071	31
B-21001-00106	74	B-30311-01403	85	B-93118-08652	71	C-52-11246-54071	31
B-21001-00689	73	B-30421-30005	85	B-93128-10082	71	C-52-11255-55090	31
B-21001-00689	74	B-30421-30005	85	B-93364-08052	72	C-52-11255-55090	31
B-21001-90408	73	B-30431-35009	85	B-95111-01200	72	C-52-30780-02340	31
B-2101A-30016	71	B-30431-35009	85	B-95112-06000	85	C-52-30780-02340	31
B-21011-30134	71	B-30461-55039	94	B-95112-06000	85	C-52-51302-53840	31
B-21011-30507	73	B-3055A-00058	94	B-95113-01000	71	C-52-51302-53840	31
B-21011-30528	74	B-3055B-00097	94	B-95113-01800	73	C-52-51308-54160	31
B-21011-30603	73	B-30551-91001	94	B-95113-02400	72	C-52-51308-54160	31
B-21011-30603	74	B-3065B-00211	85	B-95121-07000	85	C-90-0567-0822	31
B-21011-30604	73	B-3065B-00211	85	B-95121-07000	85	C-90-0567-0822	31
B-21011-30604	74	B-30697-54101	94	B-95133-00500	74	C-90-9200-0800	31
B-21011-30618	74	B-30697-54102	94	B-95713-06000	85	C-90-9200-0800	31
B-21011-30702	73	B-30697-54201	94	B-95713-06000	85	R-026-63028-00	70
B-21011-30702	74	B-30697-54202	94	B-96111-10613	85	R-400-00384-15	70
B-21011-31011	73	B-30697-54301	94	B-96111-10613	85	R-400-50647-03	69
B-21011-31011	74	B-30697-54302	94	B-96401-30159	85	R-400-50884-00	69
B-21011-31105	71	B-30697-54401	94	B-96401-30159	85	R-400-50884-00	70
B-21011-31106	71	B-30697-54402	94	B-97123-01111	72	R-402-00012-12	69
B-21011-31702	73	B-30697-54501	94	C-K2-11242-52000	31	R-402-00710-12	70
B-21011-31702	74	B-30697-54502	94	C-K2-11242-52000	31	R-402-12038-03	70
B-21011-32404	73	B-30697-54601	94	C-K2-11246-83011	31	R-402-12038-04	69
B-21011-32404	74	B-30697-54602	94	C-K2-11246-83021	31	R-402-12040-01	69
B-21011-32801	73	B-30697-54701	94	C-OC-11246-14603	31	R-402-12040-01	70
B-21011-32801	74	B-30697-54702	94	C-OC-11246-24603	31	R-402-12086-00	70
B-21013-36432	73	B-30697-54801	94	C-52-10901-64550	31	R-402-12101-04	69
B-21013-36433	74	B-30697-54802	94	C-52-10901-64550	31	R-402-12105-08	69
B-21013-37344	71	B-30697-54901	94	C-52-10901-64560	31	R-402-12105-23	70
B-21013-37344	72	B-30697-54902	94	C-52-10901-64560	31	R-402-12107-04	69
B-21731-30257	72	B-30697-55001	94	C-52-11003-05143	31	R-402-12107-11	70
B-21731-30306	72	B-30697-55002	94	C-52-11003-05143	31	R-402-12143-00	69
B-21731-30406	72	B-30697-55101	94	C-52-11105-54110	31	R-402-12143-00	70
B-21731-30502	72	B-30697-55102	94	C-52-11105-54110	31	R-402-12647-10	70
B-21731-30613	72	B-30697-55201	94	C-52-11204-69010	31	R-402-12754-00	70
B-21731-30703	72	B-30697-55202	94	C-52-11204-69010	31	R-402-65004-41	70
B-21731-30802	72	B-30697-55301	94	C-52-11218-15151	31	Z-8-94132-674-0	9
B-21733-40212	72	B-30697-55302	94	C-52-11218-15161	31	Z-8-94132-675-0	9
B-30046-67103	94	B-30697-55401	94	C-52-11218-25151	31	Z-8-94332-955-0	9
B-30046-67103	94	B-30697-55402	94	C-52-11218-25161	31	Z-8-94367-294-0	9
B-30121-55043	94	B-30697-55501	94	C-52-11232-54540	31	Z-8-94367-956-0	9
B-30121-70133	85	B-30697-55502	94	C-52-11232-54540	31	Z-8-94367-957-0	9
B-30121-70133	85	B-30697-55601	94	C-52-11239-51270	31	01030-05065	16
B-30131-45017	94	B-30697-55602	94	C-52-11239-51270	31	01033-05014	13
B-30131-55018	94	B-30697-55701	94	C-52-11239-52320	31	01066-08008	19
B-30141-35012	85	B-30697-55702	94	C-52-11239-52320	31	01100-05010	1
B-30141-35012	85	B-30697-55801	94	C-52-11242-13300	31	01100-06010	15
B-30141-91048	94	B-30697-55802	94	C-52-11242-14500	31	01100-06012	50
B-30151-03006	85	B-30697-55901	94	C-52-11242-14530	31	01100-08050	59
B-30151-03006	85	B-30697-55902	94	C-52-11242-23300	31	01100-10030	52

PARTS NUMBER INDEX

Part No.	Fig.No.	Part No.	Fig.No.	Part No.	Fig.No.	Part No.	Fig.No.
01100-12030	37	01184-10030	53	01400-20008	10	02010-00006	14
01100-14025	92	01184-10030	56	01400-20010	11	02010-00006	15
01100-14025	92	01184-10030	58	01402-00008	51	02010-00006	15
01100-14030	92	01184-10035	18	01402-00008	52	02010-00006	50
01100-14035	44	01184-10035	18	01402-00008	55	02010-00006	66
01100-16025	94	01184-10035	22	01402-00010	51	02010-00008	1
01100-16065	60	01184-10040	18	01402-00010	52	02010-00008	10
01100-20080	39	01184-10050	18	01402-00010	90	02010-00008	59
01103-08016	19	01184-10050	22	01402-00012	37	02010-00008	68
01103-08016	38	01184-10050	22	01402-00014	32	02010-00010	11
01103-08020	20	01184-12025	91	01402-00022	36	02010-00010	37
01103-08020	22	01184-12030	33	01402-00024	43	02010-00010	38
01103-08025	27	01184-12040	91	01402-00024	43	02010-00014	44
01103-08035	24	01184-12050	91	01402-10018	43	02010-00014	92
01103-08040	23	01185-06016	13	01407-00022	43	02010-00014	92
01103-08045	24	01185-08016	5	01412-00030	37	02010-00016	60
01103-08045	27	01185-08016	6	01412-00030	38	02010-00016	94
01103-08060	27	01185-08016	6	01412-10016	36	02010-00020	39
01103-10016	22	01185-08016	7	01412-10016	37	02010-00036	63
01103-10020	21	01185-08016	7	01412-10016	43	02010-20010	94
01103-10030	20	01185-08016	7	01412-10020	43	02011-00008	19
01103-10030	23	01185-08016	14	01420-00006	14	02011-00008	20
01103-10065	23	01185-08016	14	01420-00006	15	02011-00008	22
01103-10110	1	01185-08016	15	02000-00005	50	02011-00008	23
01103-10120	51	01185-08016	15	02000-00005	76	02011-00008	27
01103-10120	55	01185-08016	17	02000-00006	15	02011-00008	38
01103-14040	94	01185-08020	23	02000-00006	50	02011-00010	20
01103-16065	93	01185-08020	65	02000-00006	50	02011-00010	22
01106-12040	30	01185-10030	69	02000-00006	57	02011-00010	23
01110-36200	63	01185-10030	70	02000-00006	66	02011-00010	51
01120-08035	51	01186-10020	66	02000-00008	1	02011-00010	55
01120-08035	55	01186-12025	47	02000-00008	10	02011-00012	30
01120-10035	51	01186-12025	48	02000-00008	38	02011-00012	42
01123-10045	20	01186-12025	64	02000-00008	52	02011-00014	94
01170-05045	27	01186-12035	47	02000-00008	65	02011-00016	93
01171-06025	47	01186-12035	48	02000-00008	66	02100-00012	27
01183-05010	62	01213-10025	19	02000-00010	6	02100-00020	34
01183-06012	76	01218-10025	1	02000-00010	7	02100-00022	20
01183-06016	62	01400-00006	14	02000-00010	10	02100-00025	19
01183-08016	2	01400-00006	15	02000-00010	11	02100-00030	21
01183-08016	3	01400-00006	50	02000-00010	11	02100-00030	25
01183-08016	9	01400-00006	52	02000-00010	21	02100-00040	21
01183-08016	19	01400-00006	56	02000-00010	37	02100-00040	94
01183-08016	37	01400-00006	66	02000-00010	38	02100-00045	91
01183-08016	49	01400-00008	1	02000-00010	52	02110-00018	95
01183-08016	50	01400-00008	18	02000-00010	56	02110-00030	27
01183-08016	65	01400-00008	59	02000-00010	65	02110-00037	34
01183-08016	66	01400-00008	68	02000-00016	50	02110-00062	44
01183-08020	82	01400-00010	18	02000-00016	57	02120-00050	21
01183-08025	49	01400-00010	20	02000-00016	94	02121-00058	26
01183-08025	82	01400-00010	22	02000-00022	20	02121-00080	21
01183-08035	18	01400-00010	22	02000-00024	19	02200-02020	52
01184-10016	20	01400-00010	37	02000-00030	37	02200-03040	94
01184-10020	57	01400-00010	38	02000-00030	38	02200-04025	50
01184-10020	68	01400-00010	52	02000-20010	67	02200-04025	57
01184-10025	25	01400-00010	56	02000-20010	94	02200-04040	43
01184-10025	28	01400-00012	42	02002-00010	51	02200-06055	37
01184-10030	18	01400-00012	50	02002-00010	55	02200-06055	38
01184-10030	22	01400-00018	94	02003-20010	23	02200-16010	50
01184-10030	52	01400-10020	30	02010-00005	1	02200-16010	76

PARTS NUMBER INDEX

Part No.	Fig.No.	Part No.	Fig.No.	Part No.	Fig.No.	Part No.	Fig.No.
02200-32025	52	03320-00290	70	04911-00021	95	110F7-12001	69
02200-32025	56	03340-00140	69	04911-00021	95	11243-82161	26
02200-32032	36	03340-00140	70	04911-00040	7	114A3-10501	19
02200-32032	37	03350-00450	43	04911-00040	78	114A3-12012	19
02200-32032	43	04150-10404	75	04911-00040	79	115G3-82111	25
02212-06016	24	04150-30404	75	04911-00044	6	115G3-82241	25
02212-10020	30	04691-04108	78	04911-00044	7	115G3-82251	25
02212-10020	44	04691-04108	79	04911-00044	78	115G3-82331	26
02212-10025	27	04710-04005	61	04911-00044	79	115G3-82341	26
02212-12020	20	04710-04060	95	04911-00046	78	115G3-82351	26
02212-12020	23	04710-04070	95	04911-00046	79	115G3-82361	26
02262-06015	50	04710-04085	95	04911-00055	5	115G3-82401	26
02262-06025	57	04710-04095	95	04911-00060	4	115G3-82411	26
02262-08025	52	04710-04110	95	04911-00060	5	115G3-82451	25
02262-10030	52	04710-04120	95	04911-00060	8	115G3-82471	21
02262-10030	56	04710-04125	95	04911-00060	9	115G3-82471	25
02270-01014	95	04710-04125	95	04911-00065	4	115G3-82491	27
02360-05019	20	04710-04125	95	04911-00070	5	115G3-82512	27
02432-01008	86	04710-04135	95	04911-00075	5	115G3-82522	27
02432-01008	87	04710-04140	80	04913-10100	13	115G3-82641	21
02432-01008	88	04710-04145	95	04913-10200	13	115G3-82641	25
03000-06207	21	04710-04145	95	04913-10200	14	115G3-82651	25
03000-06208	21	04710-04150	95	04913-11100	13	115G3-82671	25
03000-06213	29	04710-04160	95	04913-11100	16	116H3-82101	23
03000-06306	21	04710-04165	81	04913-11200	13	116H3-82101	25
03000-06306	25	04710-04165	95	04913-11200	33	116H3-82201	25
03000-06306	26	04710-04170	95	04913-11200	34	116H3-82201	27
03000-06306	26	04710-04175	95	04913-11200	53	117M7-10401	70
03010-06904	34	04710-04185	95	04913-11200	56	12003-12021	19
03071-30207	37	04710-04190	95	04913-11380	81	12003-42052	20
03071-30207	38	04710-04190	95	04913-20380	83	12003-42061	20
03071-30211	37	04710-04200	95	04913-20380	84	12003-42281	21
03071-30211	38	04710-04200	95	04913-21380	95	12003-42291	21
03071-30214	30	04710-04210	95	04914-00016	95	12003-42311	21
03126-83201	37	04710-04215	95	04914-00019	61	12003-42311	25
03126-83201	38	04710-04230	95	06006-65010	42	12003-42311	28
03146-13201	37	04710-04240	95	06701-65010	42	12003-42321	21
03146-13201	37	04710-04245	95	06711-65010	42	12003-42321	25
03146-13201	38	04710-04255	95	09001-10045	94	12003-42321	28
03190-00013	20	04710-04265	95	09001-10049	94	12003-42331	21
03192-00012	30	04710-04270	95	09001-10051	94	12003-42331	25
03192-10012	30	04710-04280	95	09001-10055	94	12003-42331	28
03217-08501	37	04710-04310	95	09001-10055	94	12003-42421	20
03217-08501	38	04710-04335	95	09001-10059	94	12003-42461	20
03300-00160	20	04901-00100	19	09001-10063	94	12003-43031	21
03310-00300	20	04901-00100	37	09001-10065	94	12003-43031	25
03310-00600	19	04901-00100	85	09001-10067	94	12163-82221	25
03310-00800	28	04901-00100	93	09001-10071	94	12163-82232	25
03320-00110	45	04901-00160	19	09001-10071	94	12163-82541	20
03320-00110	82	04901-00190	37	09001-10071	94	12163-82541	23
03320-00140	75	04901-00190	38	09001-10077	94	12163-82541	25
03320-00140	95	04901-00191	37	09001-10081	94	12163-82561	24
03320-00140	95	04901-00191	38	09001-10085	94	12163-82561	24
03320-00180	69	04911-00018	95	09001-10089	94	12163-82621	23
03320-00180	70	04911-00018	95	09001-10093	94	124G3-12011	19
03320-00180	75	04911-00018	95	09001-10103	94	124G3-52011	29
03320-00180	75	04911-00020	80	09001-10111	94	124T3-43001	21
03320-00180	95	04911-00020	81	09192-30044	93	124U3-82081	25
03320-00280	95	04911-00021	80	10113-40171	21	124U3-82091	25
03320-00290	69	04911-00021	81	110F7-10271	69	124U3-82521	25

PARTS NUMBER INDEX

Part No.	Fig.No.	Part No.	Fig.No.	Part No.	Fig.No.	Part No.	Fig.No.
131A3-10201	19	134B3-82031	23	209K2-40501	13	214A4-32051	38
131A3-42021	21	134B3-82041	23	209K2-43001	13	214A4-32131	37
131M2-52001	23	134B3-82051	23	209K4-10801	32	214A4-32161	37
134A3-10211	19	134B3-82091	24	209P6-40301	65	214A4-32161	38
134A3-12001	19	134B3-82101	23	209P6-40401	65	214A4-32201	39
134A3-12011	19	134B3-82111	25	209P6-42841	65	214A4-32211	39
134A3-12021	19	134B3-82141	25	209P7-42161	67	214A4-39801	37
134A3-12031	19	134B3-82281	23	210F2-42011	16	214A4-39801	38
134A3-12051	20	134B3-82291	23	210F2-42031	16	214A4-50111	43
134A3-22001	28	134B3-82301	23	210F2-42201	16	214A4-50121	43
134A3-22011	28	134B3-82311	23	210F2-42211	16	214A4-50131	43
134A3-22021	28	134B3-82321	23	210F2-42221	16	214A4-50211	43
134A3-22031	28	134G3-80201	26	210F2-42231	16	214A4-52021	43
134A3-22041	28	134G3-80251	26	21152-22151	8	214A4-52031	43
134A3-40201	20	134G3-80301	23	21152-42013	15	214A4-52041	43
134A3-40221	21	134G3-80401	24	21152-42021	15	214A4-59802	43
134A3-42001	20	134G3-82001	24	21152-42091	14	214A5-22001	50
134A3-42011	20	135L3-82001	27	21159-12501	86	214A5-22051	50
134A3-42011	25	136F2-50001	18	212T2-42311	14	214A5-32101	52
134A3-42021	20	136F3-40201	21	21232-32551	10	214A5-32312	52
134A3-42031	20	136F3-42001	21	21232-32551	11	214A5-33012	52
134A3-42051	21	13683-82022	23	21237-52051	60	214A5-33031	52
134A3-42071	21	137B2-50001	22	21237-52051	60	214A5-33041	52
134A3-42081	21	137B3-80201	23	21237-52062	60	214A5-33052	52
134A3-42101	21	137B3-80211	23	21237-52062	60	214A5-33062	52
134A3-42111	21	139A3-42011	21	21239-12501	86	214A5-52121	59
134A3-42121	21	14354-12271	32	214A1-02111	1	214A5-52131	59
134A3-42131	21	14453-52071	29	214A1-02121	1	214A5-52241	59
134A3-42141	21	15533-10301	19	214A2-12001	6	214A5-53012	86
134A3-42151	21	15573-42011	21	214A2-12001	7	214A6-10451	39
134A3-42171	21	15573-42151	20	214A2-12011	6	214A6-12601	39
134A3-42181	21	15573-42151	30	214A2-12011	7	214A6-12611	39
134A3-42191	21	15583-82141	24	214A2-12021	6	214A6-42121	66
134A3-42201	21	15583-82151	24	214A2-12021	7	214A6-42252	64
134A3-42211	21	15583-82161	24	214A2-12111	6	214A6-42252	67
134A3-42221	20	15583-82172	24	214A2-12111	7	214A6-42771	13
134A3-42221	20	15583-82181	24	214A2-12141	6	214A6-42911	67
134A3-42221	25	15583-82211	24	214A2-12141	7	214A7-42001	77
134A3-42251	21	15583-82221	24	214A2-22071	9	214A7-42071	50
134A3-42261	21	15583-82231	24	214A2-40203	16	214A7-42071	76
134A3-42271	21	15583-82241	24	214A2-42331	7	214A7-42071	76
134A3-42301	21	15583-82251	24	214A2-42331	14	214A7-42171	76
134A3-42321	21	15583-82441	25	214A2-42331	15	214A7-52081	61
134A3-42331	21	15583-82451	25	214A2-42611	6	214A7-62131	80
134A3-42401	20	15583-82461	25	214A2-42611	7	214A8-02201	93
134A3-42411	20	15583-82521	23	214A2-42611	14	214A8-42661	94
134A3-42421	20	15583-82541	23	214A2-42611	15	214A8-44151	95
134A3-42431	20	15583-82571	27	214A2-42621	14	214A8-52051	44
134A3-42451	20	15604-10202	34	214A2-42621	15	214A8-52221	44
134A3-52001	29	15793-82321	27	214A2-44501	16	214A9-20101	89
134A3-52011	29	15793-82341	27	214A2-44511	16	214J3-00302	30
134A3-52021	29	15913-42511	21	214A2-52002	18	214J3-02011	30
134A3-52041	29	15943-82651	27	214A2-52012	18	214J4-52001	43
134A3-52051	29	15943-82661	27	214A3-02001	31	214J8-10501	90
134A3-52061	29	15943-82731	27	214A4-12161	32	214J8-10501	90
134A3-59801	29	15943-82741	27	214A4-30301	38	214J8-10511	90
134B3-80281	25	15943-82751	27	214A4-30401	37	214J8-10521	90
134B3-82001	23	16113-52121	29	214A4-32041	37	214J8-10531	90
134B3-82011	23	16113-52141	29	214A4-32041	38	214J8-10541	90
134B3-82021	23	20224-30061	37	214A4-32051	37	214J8-10551	90

PARTS NUMBER INDEX

Part No.	Fig.No.	Part No.	Fig.No.	Part No.	Fig.No.	Part No.	Fig.No.
214J8-10561	90	216G2-43281	12	216G7-42161	50	218G6-40521	65
214J8-10571	90	216G2-43301	12	216G7-52051	61	218G6-42301	66
214J8-10581	90	216G2-43502	16	216G7-52201	61	218G6-42451	65
214J8-10591	90	216G2-43511	16	216G8-33361	93	218G6-42471	65
214J8-10601	90	216G2-43521	16	216G8-33371	93	218G7-62111	78
214J8-10611	90	216G2-43531	16	216G8-33401	93	218H5-40511	57
214J8-10621	90	216G2-43542	16	216G8-52201	85	218H5-40521	57
214J8-10631	90	216G2-43551	16	216G8-52301	85	218H5-42521	57
214J8-10641	90	216G2-43562	16	216G8-52301	93	218M2-12301	6
214J8-10651	90	216G2-43571	16	216G9-10101	86	218M5-10411	46
214J8-10661	90	216G2-43582	16	216G9-12013	86	218M5-12501	46
214J8-10671	90	216G2-43592	16	216G9-12013	87	219M2-12301	7
214J8-10681	90	216G2-43602	16	216G9-12013	88	219M7-62011	79
214J8-11002	90	216G2-43611	16	216G9-12023	86	22018-30065	93
214T2-42311	14	216G2-43622	16	216G9-12023	87	22192-22091	8
214T2-42311	15	216G2-43631	16	216G9-12023	88	22192-22091	9
214T2-42321	14	216G2-43651	14	216G9-12033	86	22193-03001	30
214T2-42321	15	216G2-43651	15	216G9-12033	87	22197-60231	35
215B4-50452	44	216G2-43711	14	216G9-12033	88	22199-12401	19
215B4-52122	44	216G2-43711	15	216G9-12052	86	22199-12401	37
215E4-32341	37	216G4-12091	13	216G9-12062	86	22199-12401	38
215E4-32341	38	216G4-12101	32	216G9-12071	86	22199-12401	85
215E4-52231	38	216G4-12111	32	216G9-12071	87	22199-22251	89
215E4-52301	38	216G5-22081	50	216G9-12071	87	222A2-10211	6
215E7-62091	81	216G5-22081	57	216G9-12071	87	222A2-10211	7
215E8-42171	94	216G5-22101	50	216G9-12071	88	222A2-22061	62
215E8-42181	94	216G5-32201	52	216G9-12131	86	222A2-42031	12
215K0-82701	94	216G5-32221	52	216G9-12131	87	222A2-42031	13
216G1-02111	1	216G5-32311	52	216G9-12131	88	222A2-42331	12
216G1-02451	2	216G5-32321	52	216G9-32001	67	222A2-42331	12
216G1-02461	2	216G5-32331	52	216H3-92171	65	222A2-42361	12
216G1-02471	2	216G5-32341	52	216H3-92281	76	222A2-42401	12
216G1-02481	2	216G5-42011	52	216H3-92291	53	222A2-42401	12
216G1-02491	2	216G6-32101	63	216H3-92291	58	222A5-52111	59
216G1-02501	2	216G6-42031	52	216H5-42141	65	222A6-42451	66
216G2-22051	8	216G6-42031	56	216M7-62101	69	222A6-42461	66
216G2-22051	9	216G6-42451	65	216M7-62111	69	222A9-32011	49
216G2-22202	61	216G6-42481	65	217G2-40301	12	222Q9-12001	86
216G2-22211	8	216G6-42541	46	217G2-42021	15	222Q9-12001	87
216G2-22211	9	216G6-42541	65	217G2-42151	15	222Q9-12011	86
216G2-40301	12	216G6-42911	66	217G2-42301	14	222Q9-12011	87
216G2-40602	16	216G6-42931	66	217G2-42301	15	22208-40031	94
216G2-40701	16	216G6-43231	59	217M1-02031	5	22214-30321	37
216G2-40711	16	216G6-43241	52	217M1-02402	5	22214-30321	38
216G2-40721	16	216G6-43241	56	217M2-12221	7	22218-40191	94
216G2-40731	16	216G6-43561	64	218G1-02101	4	22218-42111	94
216G2-42071	14	216G6-43601	66	218G1-02301	1	22252-32241	10
216G2-42131	13	216G6-52231	67	218G1-02351	1	22252-32241	11
216G2-42312	14	216G6-52271	67	218G2-22001	8	22252-32251	6
216G2-42312	15	216G6-52291	65	218G2-22001	9	22252-32251	7
216G2-43111	14	216G6-52291	67	218G2-22051	8	22252-32251	10
216G2-43111	15	216G7-32001	71	218G2-22051	9	22252-32251	11
216G2-43161	12	216G7-32011	52	218G2-42001	14	22252-32251	52
216G2-43201	12	216G7-32011	56	218G2-42001	15	22252-32251	56
216G2-43211	12	216G7-32011	71	218G2-42101	14	224G2-32011	11
216G2-43221	12	216G7-32021	71	218G5-42011	53	224G5-42061	52
216G2-43231	12	216G7-32041	71	218G5-42011	58	224G5-42061	56
216G2-43241	12	216G7-40012	76	218G5-42021	53	224W4-32171	43
216G2-43261	12	216G7-40022	76	218G5-42021	58	224W4-32301	43
216G2-43271	12	216G7-42001	76	218G6-40401	66	224W4-32311	43

PARTS NUMBER INDEX

Part No.	Fig.No.	Part No.	Fig.No.	Part No.	Fig.No.	Part No.	Fig.No.
224W4-52071	4	230C1-02041	48	234A6-82141	68	234F8-10681	90
224W7-62701	45	230C1-02041	67	234A6-82151	68	234F8-12101	90
224W7-62711	45	230C2-42201	14	234A6-82161	68	234F8-22201	92
22438-45551	94	230C2-42201	15	234A6-82171	68	234F8-41001	95
22438-45591	94	230C2-42301	15	234A6-82181	68	234G3-02001	30
22438-45651	94	230C5-55021	59	234A6-82191	68	23452-42181	14
22438-45691	94	230C5-55031	59	234A6-82201	68	23452-42181	15
22438-45691	94	230C5-55041	59	234A6-82211	68	23453-02071	30
22438-45751	94	230C5-55051	59	234A6-82221	68	23453-02091	30
22438-45791	94	230C5-55061	59	234A6-82231	68	23455-42021	53
22438-45811	94	230C5-55071	59	234A6-82241	68	23455-42021	58
22438-45851	94	230C5-55081	59	234A6-82251	68	23456-42181	52
22438-45871	94	230C5-55101	59	234A6-82261	68	23456-42181	65
22438-45891	94	230C5-55111	59	234A6-82271	68	23457-60301	35
22438-45891	94	230C5-55121	59	234A6-82281	68	23457-60311	35
22438-45971	94	232A1-02001	5	234A6-82291	68	23458-32052	91
22438-46011	94	232A8-42201	94	234A6-82301	68	23467-82041	83
22438-46071	94	232W9-10101	87	234A7-30202	71	23467-82041	84
22438-46111	94	232W9-12001	87	234A7-32001	71	235C2-40301	14
22438-46151	94	232W9-12011	87	234A7-52101	61	235C2-40301	15
22438-46271	94	232W9-12021	87	234A7-52301	61	236F1-00101	1
22438-46371	94	232W9-12051	87	234A7-62101	78	236G1-00101	1
22439-44031	41	232W9-12101	87	234A7-62101	79	236G2-82021	87
225A7-62021	69	232W9-12111	87	234A8-02001	93	23647-40041	76
225A7-62021	70	23232-42072	14	234A8-02101	95	23647-40121	57
225A7-62031	69	23232-42072	15	234A8-02201	95	23651-02001	1
225A7-62031	70	23235-40091	54	234A8-40701	95	23651-02011	1
225R2-42001	14	233A1-02001	4	234A8-41101	95	23652-12051	6
225R9-12001	87	234A1-00101	3	234A8-42551	94	23652-12051	7
225R9-12031	87	234A1-00111	3	234A8-42561	94	23652-12051	10
225R9-12051	87	234A1-00121	3	234A8-42571	94	23652-12051	11
225R9-12071	87	234A1-02001	5	234A8-42602	95	23652-44001	15
225R9-12081	87	234A1-02071	1	234A8-42611	95	23653-02001	30
225R9-12091	87	234A2-12201	6	234A8-42622	95	23654-32041	37
225R9-12112	87	234A2-12201	7	234A8-43501	94	23654-32041	38
225T9-12001	87	234A2-12211	6	234A8-50103	85	23654-32081	37
225T9-12011	87	234A2-12211	7	234A8-50113	85	23654-32161	37
22517-40051	76	234A2-42301	17	234B2-42201	14	23654-32161	38
22517-40051	94	234A4-30001	37	234B7-82101	84	23654-34051	40
22548-34031	91	234A4-30011	37	234B7-82111	84	23655-22101	65
22548-34051	91	234A4-32261	37	234F4-22101	36	23658-42531	94
22548-34061	91	234A4-32271	37	234F4-40302	42	23659-12054	86
22655-42591	56	234A6-42042	67	234F8-10501	90	23659-12101	86
22679-47301	48	234A6-42072	67	234F8-10511	90	23659-12101	87
22717-40061	50	234A6-43121	66	234F8-10521	90	23659-12101	88
22717-40061	76	234A6-81001	68	234F8-10531	90	23678-06002	93
22717-40081	94	234A6-82001	68	234F8-10541	90	23678-40060	95
22777-60301	75	234A6-82011	68	234F8-10551	90	23678-40070	95
22777-62001	75	234A6-82021	68	234F8-10561	90	23678-40085	95
228F2-42131	14	234A6-82031	68	234F8-10571	90	23678-40095	95
228U7-62201	83	234A6-82041	68	234F8-10581	90	23678-40110	95
228U7-62211	83	234A6-82051	68	234F8-10591	90	23678-40110	95
228U7-62221	83	234A6-82061	68	234F8-10601	90	23678-40120	95
228U7-62221	84	234A6-82071	68	234F8-10611	90	23678-40125	95
229F2-22071	62	234A6-82081	68	234F8-10621	90	23678-40125	95
229F2-22151	61	234A6-82091	68	234F8-10631	90	23678-40135	95
229F2-22161	61	234A6-82101	68	234F8-10641	90	23678-40145	95
229F2-42421	12	234A6-82111	68	234F8-10651	90	23678-40145	95
229F2-42431	12	234A6-82121	68	234F8-10661	90	23678-40150	95
229F6-42201	13	234A6-82131	68	234F8-10671	90	23678-40160	95

PARTS NUMBER INDEX

Part No.	Fig.No.	Part No.	Fig.No.	Part No.	Fig.No.	Part No.	Fig.No.
23678-40165	95	239A2-52016	18	239A6-43111	64	239F8-30082	93
23678-40170	95	239A4-12102	32	239A6-50112	67	239F8-30092	93
23678-40175	95	239A4-12112	32	239A6-50302	67	239F8-30102	93
23678-40185	95	239A4-12121	32	239A6-52131	67	239F8-30112	93
23678-40190	95	239A4-12201	33	239A6-52141	67	239F8-30122	93
23678-40190	95	239A4-12211	33	239A6-52171	67	239F8-30132	93
23678-40200	95	239A4-12211	34	239A6-52221	67	239F8-30142	93
23678-40200	95	239A4-12402	32	239A7-50201	61	239F8-30152	93
23678-40210	95	239A4-12411	32	239A7-52001	61	239F8-30162	93
23678-40215	95	239A4-12431	32	239A7-60301	80	239F8-30172	93
23678-40230	95	239A4-12441	32	239A7-60311	80	239F8-30182	93
23678-40240	95	239A4-12501	13	239A7-62111	82	239F8-30202	93
23678-40245	95	239A4-12511	13	239A7-62121	82	239F8-30212	93
23678-40255	95	239A4-12521	13	239A7-62131	82	239F8-30222	93
23678-40265	95	239A4-12541	13	239A7-62211	82	239F8-30232	93
23678-40270	95	239A4-22001	33	239A7-62251	82	239F8-30242	93
23678-40280	95	239A4-50201	43	239A7-62261	82	239F8-30252	93
23678-40310	95	239A5-10111	48	239A7-62351	82	239F8-30262	93
23678-40335	95	239A5-10121	48	239A7-62401	82	239F8-30272	93
23678-42401	95	239A5-10341	47	239A9-92001	49	239F8-30282	93
23679-45051	95	239A5-10351	47	239B2-10101	7	239F8-30292	93
237A1-02101	2	239A5-12401	48	239B2-12141	6	239F8-30302	93
237A2-10101	6	239A5-12411	48	239B2-12141	7	239F8-30312	93
237A2-12001	6	239A5-12501	49	239B2-42201	12	239F8-30322	93
237A2-12011	6	239A5-12521	49	239B5-40021	55	239F8-30332	93
237A2-12201	6	239A5-20302	50	239B5-40031	55	239F8-30342	93
237A2-22101	62	239A5-20312	50	239B5-40101	55	239F8-30352	93
237A2-42151	14	239A5-20402	50	239B5-40201	55	239F8-30362	93
237A2-42211	14	239A5-22252	50	239B5-40301	55	239F8-30372	93
237A5-22101	50	239A5-40051	51	239B5-40401	55	239F8-30382	93
237B2-10101	6	239A5-40061	51	239B5-42201	51	239F9-12001	86
237B2-42211	14	239A5-40071	51	239B5-42201	55	239F9-12001	87
237F2-30101	10	239A5-40101	52	239B5-42211	51	239F9-12001	88
23772-12071	6	239A5-40101	56	239B5-42211	55	239G5-40501	57
23772-12071	7	239A5-40201	51	239B5-42221	51	239T9-12071	87
23775-42101	56	239A5-40301	51	239B5-42221	51	23913-02041	40
238A2-42151	15	239A5-40401	51	239B5-42221	55	24234-32331	36
238F1-00101	1	239A5-40501	52	239B5-42221	55	24234-32331	37
238F2-12001	7	239A5-42301	54	239B5-42231	51	24234-32342	36
238F2-12011	7	239A5-42351	53	239B5-42231	55	24234-32342	37
238F2-12201	7	239A5-42351	58	239B5-42421	53	24234-32352	36
238F2-42212	15	239A5-42381	14	239B5-42421	58	24234-32352	37
238F5-22101	50	239A5-42381	15	239B5-42501	57	24234-32381	37
238F9-12071	86	239A5-42381	52	239B5-42701	53	24234-32381	43
238G2-42212	15	239A5-42381	56	239B5-42701	58	24234-32411	37
238P2-30101	11	239A5-42401	52	239B6-50302	67	24234-32421	37
23819-20011	89	239A5-42411	52	239B6-52221	67	24329-46201	95
23819-20021	89	239A5-42441	53	239F5-42601	53	24450-92021	92
23870-52821	24	239A5-42441	58	239F5-42601	58	24452-52002	30
239A1-02511	3	239A5-42451	53	239F5-42621	53	24453-00301	30
239A2-10101	7	239A5-42461	53	239F5-42621	58	24453-02061	30
239A2-12141	7	239A5-42471	53	239F8-20002	91	24453-02102	30
239A2-22101	62	239A5-50101	59	239F8-30002	93	24453-02131	30
239A2-40501	13	239A6-40201	64	239F8-30012	93	24454-30512	37
239A2-42031	14	239A6-40301	66	239F8-30022	93	24454-32161	37
239A2-42031	15	239A6-42001	64	239F8-30032	93	24454-32232	37
239A2-42101	15	239A6-42291	66	239F8-30042	93	24454-32232	38
239A2-42201	12	239A6-43001	64	239F8-30052	93	24454-32391	37
239A2-42221	16	239A6-43011	64	239F8-30062	93	24454-39812	37
239A2-52001	18	239A6-43101	64	239F8-30072	93	24454-40201	41

PARTS NUMBER INDEX

Part No.	Fig.No.	Part No.	Fig.No.	Part No.	Fig.No.	Part No.	Fig.No.
24454-40211	41	27042-42312	80	51232-82001	88	522A3-82841	87
24454-40221	41	27042-42312	81	51232-82011	87	522Q2-60501	31
24459-22011	89	27049-12172	86	51232-82021	87	522Q2-60511	31
24459-42391	94	27049-12172	87	51232-82032	87	522Q2-82011	87
24459-42951	95	27049-12172	88	514A2-40462	44	522Q2-82051	87
24469-42701	44	271A7-52301	61	514A2-42481	38	523S2-42512	81
24662-22032	9	271A7-60351	70	514A2-42601	34	52356-80302	42
24662-22131	9	271A7-62161	70	514A2-42611	34	524W2-42651	34
24662-22141	9	271A9-12251	86	514A2-42621	34	524W5-12091	48
24868-42111	94	272A8-52101	38	514A2-42721	38	52436-82101	41
25303-02102	30	272E7-52022	62	514A2-82012	87	52436-82111	41
25592-42081	14	27397-52101	23	514A3-71701	91	52436-82121	41
25592-42081	15	27415-52151	59	514A3-82002	87	52672-72122	87
25592-42121	62	27419-12061	87	514A3-82002	88	52672-72122	88
25594-52362	43	27419-12061	88	514A3-82012	87	52672-82062	87
25595-42311	52	27419-12062	86	514A3-82022	87	52672-82073	87
25595-42452	52	27419-12071	87	514A3-82331	87	529F2-42611	34
25595-42452	52	27419-12071	88	514A3-82341	87	533A2-40201	44
25595-42491	52	27419-12072	86	514A5-12011	47	533A2-40211	44
25595-42491	56	27455-22011	50	514A5-12011	47	533A2-40402	38
25597-62211	35	277H7-60501	82	514A5-12011	48	533A2-42001	44
256A1-08031	3	277H7-60601	75	514A5-12011	48	533A2-42021	44
256A2-42171	14	277H7-62351	82	514A5-12011	48	533A2-42032	38
256A2-42171	15	277P8-22051	91	514A5-12011	66	533A2-42042	38
256C1-08011	2	277P8-22051	91	514A5-12021	49	533A2-42071	38
256C5-12671	67	277P8-22051	93	514J2-92001	88	533A2-42101	38
256C9-12291	86	277P8-22051	93	514J3-74061	94	534A2-42031	34
256C9-12291	87	277P8-22061	91	514T2-72061	48	534A3-82311	87
256C9-12291	88	277P8-22061	93	516G2-40451	35	534A3-82311	88
256G1-08011	3	277P8-22071	91	516G2-42401	34	534A3-82331	87
256G1-08021	3	277P8-22071	93	516G2-42411	34	534A3-82341	87
25784-52342	44	277P8-22071	93	516G2-72701	87	534A3-82421	87
25785-43091	52	277P8-22081	91	516G2-72701	88	534A3-82421	88
25786-32031	63	277P8-22081	93	516G2-72711	87	534A3-82441	87
25787-82081	83	277P8-22081	93	516G2-72711	88	534A3-82451	87
25787-82081	84	277P8-32701	60	516G2-82011	87	534A3-82531	87
25789-12051	86	277T8-40001	94	516G2-82021	87	534A5-00401	49
25953-72001	31	277T8-40011	94	516G2-82031	87	534A5-12321	49
25954-52061	43	277T8-40021	94	516G2-82051	87	534A5-12331	49
25954-52071	43	277T8-40031	94	516G2-82061	87	534A5-12571	49
25954-52081	43	277T8-40041	94	516G3-82011	87	534B8-30201	27
25954-52091	43	277T8-40051	94	516G3-82111	87	534B8-32001	27
25957-62201	84	277T8-40061	94	516G3-82121	87	534B8-32011	27
25958-52201	44	277T8-40071	94	516G3-82211	87	534B8-32021	27
25958-52211	44	277T8-40081	94	516G3-82221	87	534B8-32021	27
25958-52221	44	277T8-40091	94	516G3-82402	87	534B8-32041	27
26062-42881	14	277T8-40101	94	516G3-82402	88	534B8-32051	27
26062-42881	15	277T8-40111	94	516G3-82801	87	534F3-82001	42
26094-17001	34	277T8-40121	94	516G3-82801	88	534G8-30101	22
26094-17021	34	277T8-40131	94	516G3-82821	87	535C2-60401	65
26094-17081	34	277T8-40141	94	516G3-82831	87	536G2-82181	87
26094-17091	34	277T8-40151	94	516G5-13051	47	536G2-82181	88
26094-17101	34	277T8-40161	94	516G5-13151	47	536G2-82281	87
26094-17111	34	277T8-40171	94	516G5-13511	49	536G3-82001	87
26094-17121	34	277T8-40181	94	516G6-22031	12	536G3-82011	87
26094-17141	34	27979-43101	95	518G2-80231	46	53651-12551	2
26094-17151	34	281E7-42011	77	522A2-72111	87	53651-12551	3
26314-17001	34	51152-82012	87	522A2-72111	88	53652-82011	87
26314-17021	34	51152-82022	87	522A2-82151	87	53652-82352	87
27042-42312	50	51232-82001	87	522A3-82641	87	53652-82401	87

PARTS NUMBER INDEX

Part No.	Fig.No.	Part No.	Fig.No.	Part No.	Fig.No.	Part No.	Fig.No.
53652-82541	87						
53652-82551	87						
53675-54101	95						
53675-55051	95						
539A2-40201	34						
539A2-42001	34						
539A2-42011	34						
539A2-80111	48						
539A2-80221	48						
539A2-82251	48						
539A5-12001	49						
55592-82001	87						
55592-82001	88						
55959-12052	87						
571A3-82361	87						
571A3-82361	88						
577P3-74001	91						
577P3-74001	91						
577P3-74001	93						
577P3-74001	93						
577P3-74011	91						
577P3-74011	93						
58106-31011	15						
59595-55301	44						
63110-12281	75						
63130-25614	71						
80110-00628	34						
80430-00006	34						
89140-00006	35						
89140-00006	35						
89140-00006	35						
89140-00006	35						

No.PF-36PA
平成13年 12月　発行

TCM株式会社
本　社　大阪市西区京町堀1－15－10
発 行　TCMテクノ株式会社

ISSUED:DECEMBER,2001

TCM CORPORATION
INTERNATIONAL MARKETING DIVISION : 1-15-5, Nishi－shimbashi, Minato－ku, Tokyo
105－0003, Japan
FAX : Japan +81－3－35918152, 3－35918153

無断で転載・複製を禁ず
All rights reserved.

SA－1312001(H)　Printed in Japan

TCM株式会社